1 GC 01 PERSPECTIVE
SCALE NTS

NOTES:
1. VERIFY ACTUAL ELEVATION MARKS AND LOT BOUNDARIES PRIOR TO COMMENCING WORKS.
2. VERIFY ACTUAL BEARING, DISTANCES AND TECHNICAL SITE CONDITIONS.
3. ALL WORKS TO BE DONE HEREIN SHALL BE IN ACCORDANCE WITH THE APPROVED PLANS & SPECIFICATIONS. ANY DEVIATIONS OR CHANGES IN THE PLANS AND/OR SPECIFICATIONS SHALL BE SUBJECT TO THE APPROVAL OF THE DESIGNER.

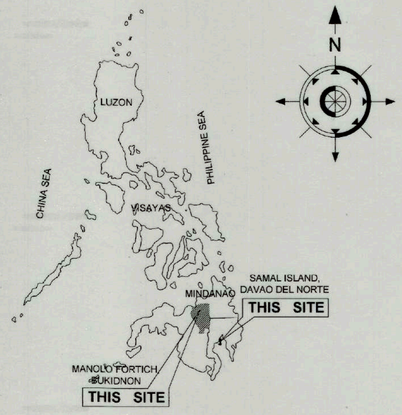

2 GC 01 KEY MAP
SCALE NTS

CONSTRUCTION OF TOURIST SERVICE CENTER AND REST AREA IN MINDANAO

PROVINCES:

1. SAMAL ISLAND, DAVAO DEL NORTE
2. MANOLO FORTICH, BUKIDNON

SCOPE OF WORKS:

I. MANOLO FORTICH, BUKIDNON
- A. GENERAL REQUIREMENTS
- B. TOURIST SERVICE CENTER AND REST AREA
- C. LANDSCAPE
- D. PARKING AREA
- E. STAND ALONE SIGNAGE
- F. ALL-IN-ONE SOLAR INTEGRATED PARK LIGHT

II. SAMAL ISLAND, DAVAO DEL NORTE
- A. GENERAL REQUIREMENTS
- B. TOURIST SERVICE CENTER AND REST AREA
- C. LANDSCAPE
- D. PARKING AREA
- E. STAND ALONE SIGNAGE
- F. ALL-IN-ONE SOLAR INTEGRATED PARK LIGHT
- G. HAULING OF MATERIALS TO PROJECT SITE

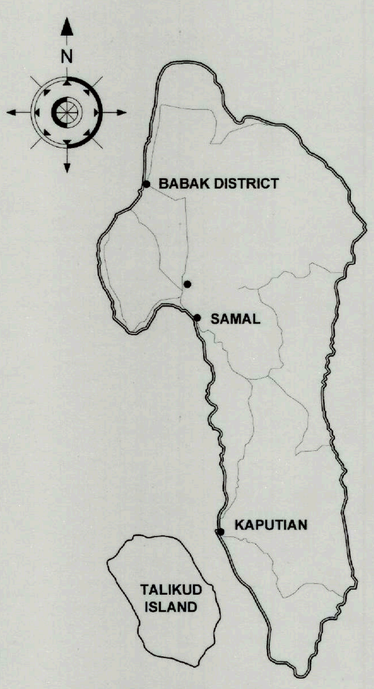

3 GC 01 MAP OF DAVAO
SCALE NTS

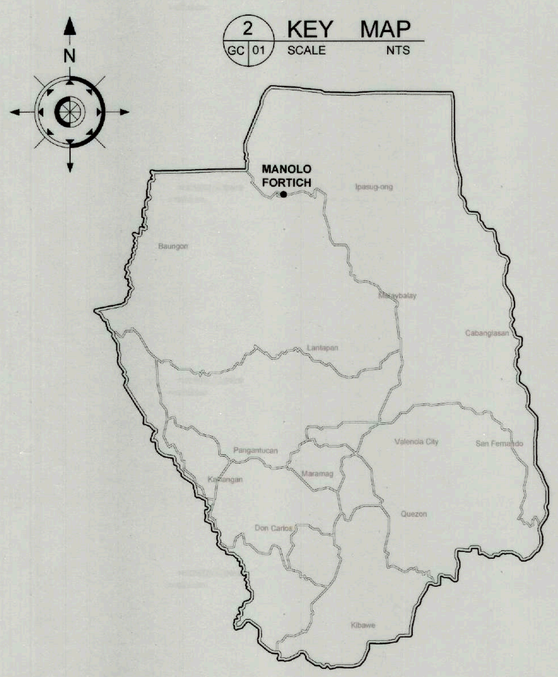

4 GC 01 MAP OF BUKIDNON
SCALE NTS

TABLE OF CONTENTS

GENERAL COVER

GC 1	PERSPECTIVE SCOPE OF WORKS KEY MAP MAP OF DAVAO MAP OF BUKIDNON TABLE OF CONTENTS
GC 2	LOCATION MAP VICINITY MAP SITE DEVELOPMENT PLAN
GC 3	LOCATION MAP VICINITY MAP SITE DEVELOPMENT PLAN

ARCHITECTURAL

A 1	FLOOR PLAN ROOF PLAN ELEVATIONS SECTION ELEVATIONS
A 2	LOWER REFLECTED CEILING PLAN UPPER REFLECTED CEILING PLAN BAFFLE CEILING PLAN CEILING FIXTURES BAFFLE CEILING DETAIL
A 3	BAY SECTIONS
A 4	DOORS & WINDOWS SCHEDULE
A 5	WOOD SLATS DETAILS (RIGHT SIDE) WOOD SLATS DETAILS (FRONT) ROOF FLASHING DETAIL STAIRS DETAILS (LEFT SIDE) STAIRS DETAILS (FRONT) BLOW-UP DETAILS
A 6	RAMP DETAILS RAMP RAILING CONN. DETAIL PWD RAMP SIGNAGE RAILING DETAILS RAILING CONN. DETAIL
A 7	FURNITURE SCHEDULE CHARGING STATION DETAIL BLOW-UP DETAILS
A 8	INFORMATION COUNTER DETAIL INFORMATION COUNTER WALL
A 9	COFFEE TABLE PLAN
A 10	DISPLAY RACK DETAILS
A 11	MALE TOILET BLOW-UP PLAN SECTION VIEWS FIXTURES
A 12	PWD TOILET BLOW-UP PLAN SECTION VIEWS FIXTURES
A 13	FEMALE TOILET BLOW-UP PLAN SECTION VIEWS FIXTURES
A 14	LAVATORY DETAILS VANITY CABINET DETAIL WC SENSOR CONN. DETAIL
A 15	SIGNAGE CONN. DETAIL RESTROOM SIGNAGE FEMALE/MALE/PWD SIGNAGE WALL CABINET DETAILS
A 16	FACADE SIGNAGE DETAILS STAND ALONG SIGNAGE DETAILS SIGNAGE DETAILS

LANDSCAPING

SAMAL ISLAND, DAVAO DEL NORTE

L 1	LANDSCAPE PLAN TYPICAL PLANT BOX PLAN TYPICAL PLANT BOX DETAIL

MANOLO FORTICH, BUKIDNON

L 2	LANDSCAPE PLAN

STRUCTURAL

S 1	STRUCTURAL NOTES TYPICAL CHB WALL CONNECTION DETAILS SCHEDULE OF CHB REINFORCEMENTS
S 2	FOUNDATION PLAN WALL FOOTING LAYOUT TYPICAL FOOTING PLAN TYPICAL FOOTING DETAILS CF-1 PLAN CF-2 PLAN WF-1 DETAILS WF-2 DETAILS SCHEDULE OF FOOTINGS
S 3	TYPICAL COLUMN DETAILS SCHEDULE OF COLUMNS TYPICAL LINTEL BEAM DETAILS TYPICAL STIFFENER BEAM DETAILS TYPCIAL STIFFENER COLUMN DETAILS TYP. STIFFENER BEAM & COLUMN ELEV. DETAIL
S 4	ROOF FRAMING LAYOUT-1 ROOF FRAMING LAYOUT-2 SCHEDULE OF BEAMS TYPICAL BEAM DETAILS
S 5	TRUSS-1 DETAILS TRUSS-2 DETAILS SCHEDULE OF TRUSS MEMBERS TYPICAL TRUSS SUPPORT CONNECTION DETAILS PURLIN CONNECTION DETAILS

ELECTRICAL

E 1	GENERAL NOTES LOWER CEILING LIGHTING LAYOUT UPPER CEILING LIGHTING LAYOUT POWER LAYOUT
E 2	LOAD SCHEDULE ELECTRICAL POLE DETAIL SINGLE LINE DIAGRAM
E 3	STANDARD LAMP POST DETAIL

SANITARY

SAMAL ISLAND, DAVAO DEL NORTE

P 1	TYPICAL CONNECTION DETAIL GENERAL NOTES CATCH BASIN DETAILS LEACHING FIELD SEPTIC TANK DETAILS
P 2	SEWERLINE LAY-OUT SEWERLINE ISOMETRIC VIEW
P 3	WATERLINE LAY-OUT WATERLINE ISOMETRIC VIEW
P 4	DRAINAGE LAY-OUT DRAINAGE ISOMETRIC VIEW

MANOLO FORTICH, BUKIDNON

P 5	SEWERLINE LAY-OUT SEWERLINE ISOMETRIC VIEW
P 6	WATERLINE LAY-OUT WATERLINE ISOMETRIC VIEW
P 7	DRAINAGE LAY-OUT DRAINAGE ISOMETRIC VIEW

MECHANICAL

M 1	AIRCONDITIONING SYSTEM LAY-OUT LEGEND GENERAL NOTES

TEMPORARY FACILITY

TF 1	TEMPORARY BARRACKS SIGNAGE

Department of Public Works and Highways
OFFICE OF THE BUILDING OFFICIAL

District/ City/ Municipality

LAND USE & ZONING

LINE AND GRADE

ARCHITECTURAL

CIVIL/ STRUCTURAL

ELECTRICAL

MECHANICAL

SANITARY

ELECTRONICS

INTERIOR DESIGN

FIRE

TIEZA
TOURISM INFRASTRUCTURE AND ENTERPRISE ZONE AUTHORITY
8th & 7th FLR. TOWER 1 DOUBLE DRAGON PLAZA
DOUBLE DRAGON MERIDIAN PARK, MACAPAGAL AVENUE
CORNER EDSA EXTENSION BAY AREA PASAY CITY 1308

PROJECT TITLE/ LOCATION:
TOURIST SERVICE CENTER AND REST AREA
BRGY. PEÑAPLATA, IGACOS, DAVAO DEL NORTE AND MANOLO FORTICH, BUKIDNON

PROJECT EVALUATION AND PLANNING DEPARTMENT

PREPARED BY:	CHECKED BY:	REVIEWED BY:	RECOMMENDING APPROVAL:	APPROVED BY:
SHEILA MAE A. LAGAT	RADY E. ADAME	JEOFFREY L. MACALALAD	GREGORY A. OLLER	MARK T. LAPID
DRAWN BY: SAL	MANAGER PROJECT PLANNING & DESIGN DIVISION	OIC - MANAGER PROJECT EVALUATION & PLANNING DEPARTMENT	ASSISTANT CHIEF OPERATING OFFICER ARCHITECTURAL & ENGINEERING SERVICES SECTOR	CHIEF OPERATING OFFICER
DATE:				

SHEET CONTENTS:
PERSPECTIVE
SCOPE OF WORKS
KEY MAP
MAP OF DAVAO
MAP OF BUKIDNON
TABLE OF CONTENTS

REVISIONS:

R.A. 9266

THIS DRAWING AS INSTRUMENT OF SERVICE IS A PROPERTY OF TIEZA. IT SHALL BE UNLAWFUL TO DUPLICATE OR TO MAKE COPIES OF THIS DOCUMENT WITHOUT THE CONCENT OF TIEZA.

SHEET NO. GC 01 1 3

PEPD.QF.02a

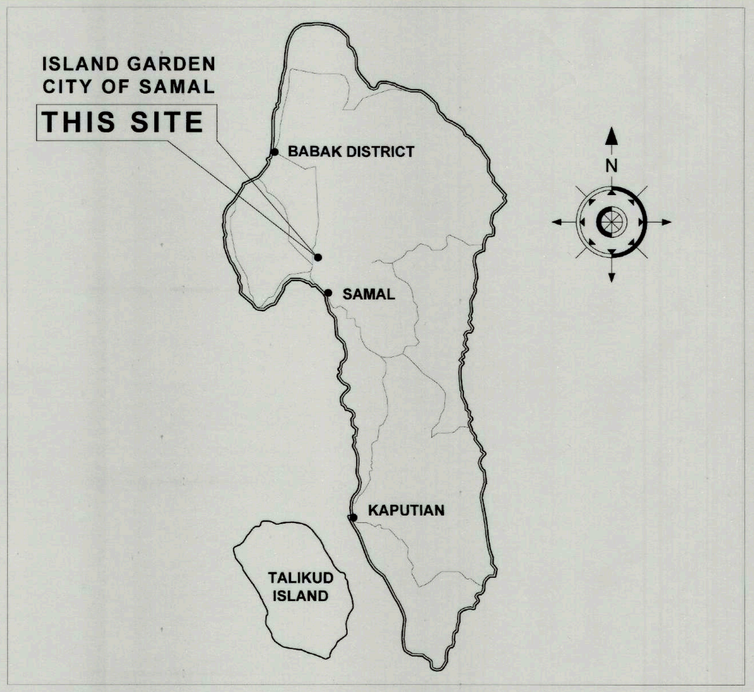

1 GC 03 LOCATION MAP
SCALE NTS

2 GC 03 VICINITY MAP
SCALE NTS

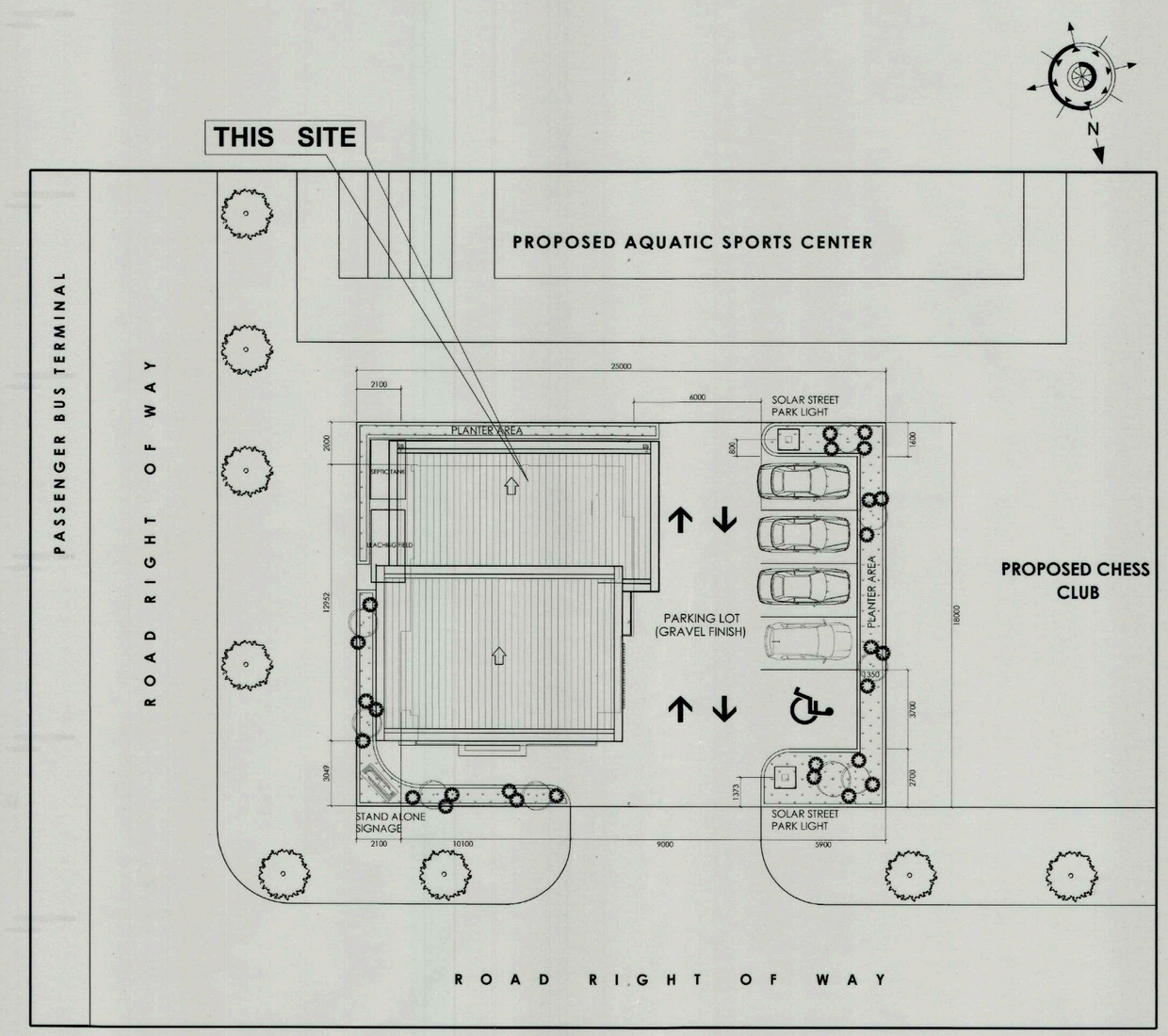

3 GC 03 SITE DEVELOPMENT PLAN
SCALE 1 : 150

CONFORME:

AL DAVID T. UY
MUNICIPAL MAYOR

TIEZA TOURISM INFRASTRUCTURE AND ENTERPRISE ZONE AUTHORITY 6th & 7th FLR. TOWER 1 DOUBLE DRAGON PLAZA DOUBLE DRAGON MERIDIAN PARK, MACAPAGAL AVENUE CORNER EDSA EXTENSION BAY AREA PASAY CITY 1308	PROJECT TITLE/ LOCATION:	PROJECT EVALUATION AND PLANNING DEPARTMENT			RECOMMENDING APPROVAL:	APPROVED BY:	SHEET CONTENTS:	R.A. 9266	SHEET NO.
	TOURIST SERVICE CENTER AND REST AREA BRGY. PEÑAPLATA, IGACOS, DAVAO DEL NORTE AND MANOLO FORTICH, BUKIDNON	PREPARED BY: SHEILA MAE A. LAGAT DRAWN BY: SAL DATE:	CHECKED BY: RADY E. ADAME MANAGER PROJECT PLANNING & DESIGN DIVISION	REVIEWED BY: JEOFFREY L. MAGALALAD OIC - MANAGER PROJECT EVALUATION & PLANNING DEPARTMENT	GREGORY A. OLLER ASSISTANT CHIEF OPERATING OFFICER ARCHITECTURAL & ENGINEERING SERVICES SECTOR	MARK T. LAPID CHIEF OPERATING OFFICER	LOCATION MAP VICINITY MAP SITE DEVELOPMENT PLAN REVISIONS:	THIS DRAWING AS INSTRUMENT OF SERVICE IS A PROPERTY OF TIEZA. IT SHALL BE UNLAWFUL TO DUPLICATE OR TO MAKE COPIES OF THIS DOCUMENT WITHOUT THE CONSENT OF TIEZA.	GC 02 2 3

PEPD.QF.02a

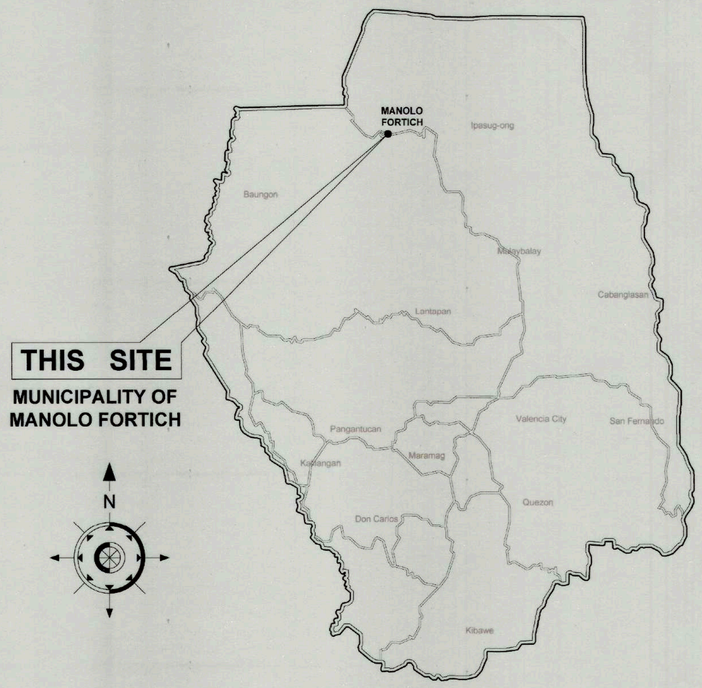

1 GC 03 LOCATION MAP
SCALE NTS

THIS SITE

2 GC 03 VICINITY MAP
SCALE NTS

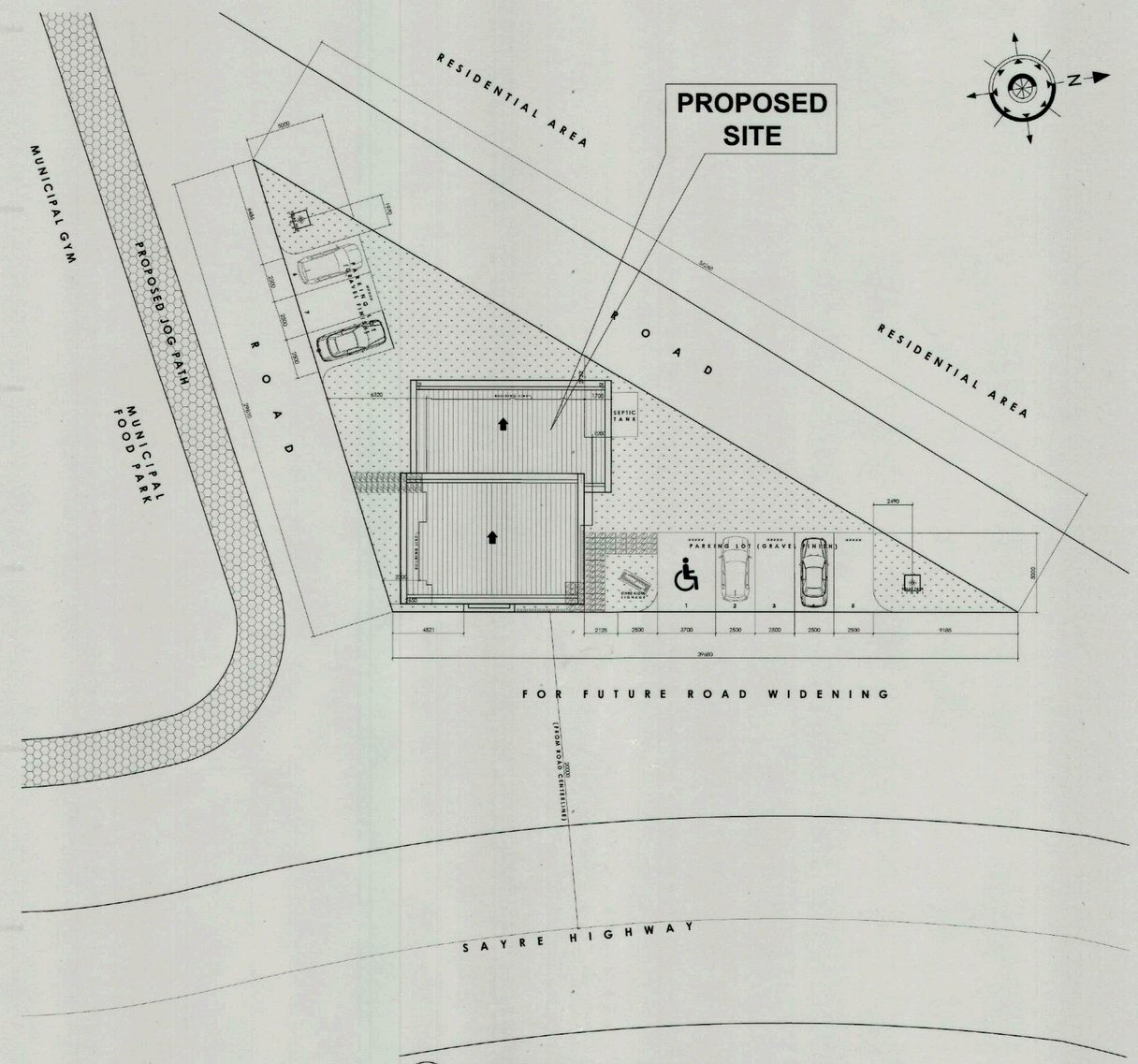

3 GC 03 SITE DEVELOPMENT PLAN
SCALE 1 : 200

CONFORME:

ROGELIO N. QUIÑO
MUNICIPAL MAYOR

TIEZA TOURISM INFRASTRUCTURE AND ENTERPRISE ZONE AUTHORITY 6th & 7th FLR. TOWER 1 DOUBLE DRAGON PLAZA DOUBLE DRAGON MERIDIAN PARK, MACAPAGAL AVENUE CORNER EDSA EXTENSION BAY AREA PASAY CITY 1308	PROJECT TITLE/ LOCATION: TOURIST SERVICE CENTER AND REST AREA BRGY. TANKULAN, MANOLO FORTICH, BUKIDNON	PROJECT EVALUATION AND PLANNING DEPARTMENT			RECOMMENDING APPROVAL:	APPROVED BY:	SHEET CONTENTS:	R.A. 9266	SHEET NO.
		PREPARED BY: AILYN CLAIRE L. BERNESTO	CHECKED BY: RADY E. ADAME	REVIEWED BY: JEOFFREY L. MACALALAD	GREGORY A. OLLER	MARK T. LAPID	LOCATION MAP VICINITY MAP SITE DEVELOPMENT PLAN	THIS DRAWING AS INSTRUMENT OF SERVICE IS A PROPERTY OF TIEZA. IT SHALL BE UNLAWFUL TO DUPLICATE OR TO MAKE COPIES OF THIS DOCUMENT WITHOUT THE CONCENT OF TIEZA.	GC 03 3 3
		DRAWN BY: ACLB DATE: SEPTEMBER 14, 2022	MANAGER PROJECT PLANNING & DESIGN DIVISION	OIC - MANAGER PROJECT EVALUATION & PLANNING DEPARTMENT	ASSISTANT CHIEF OPERATING OFFICER ARCHITECTURAL & ENGINEERING SERVICES SECTOR	CHIEF OPERATING OFFICER	REVISIONS:		

PEPD.QF.02a

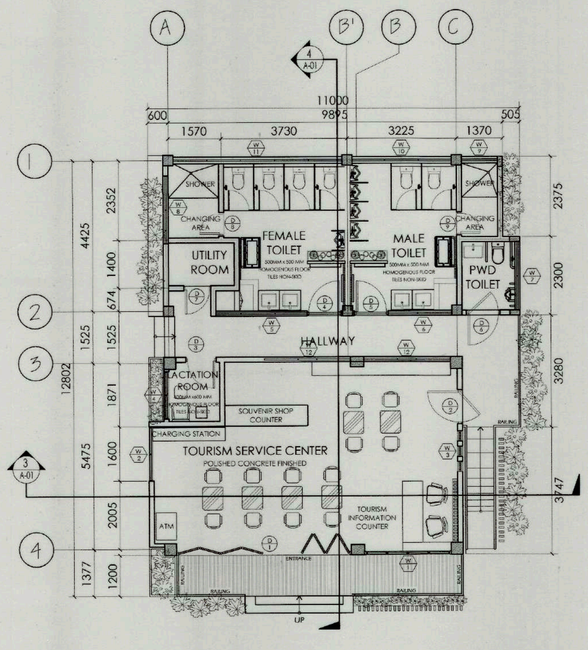

1 A 01 FLOOR PLAN
SCALE 1:100

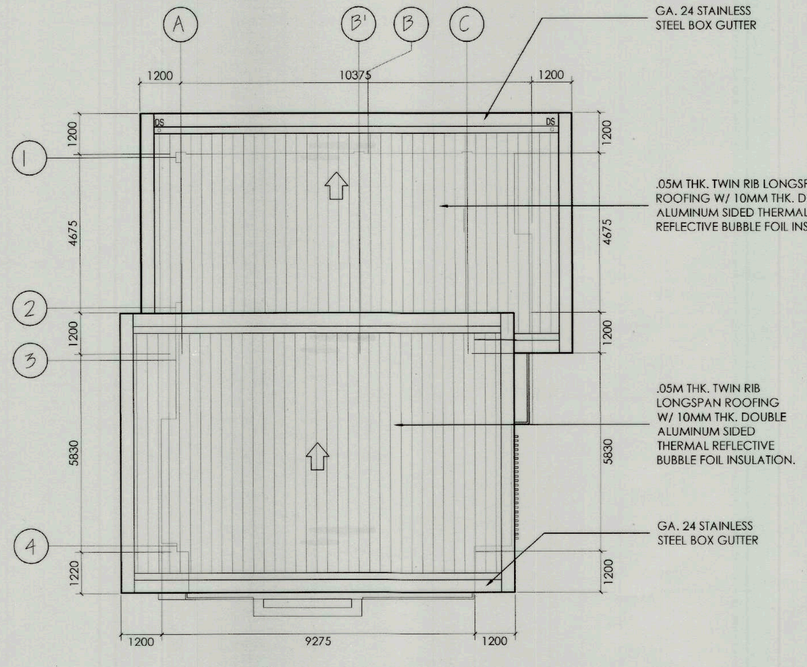

2 A 01 ROOF PLAN
SCALE 1:100

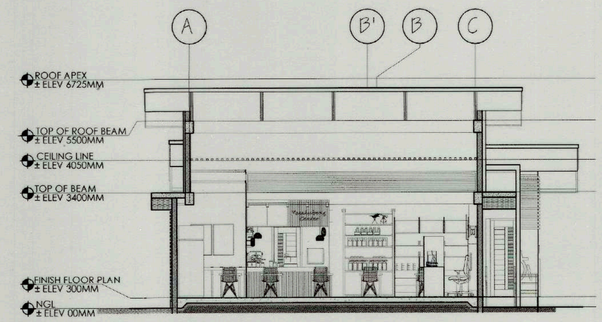

3 A 01 CROSS SECTION
SCALE 1:100

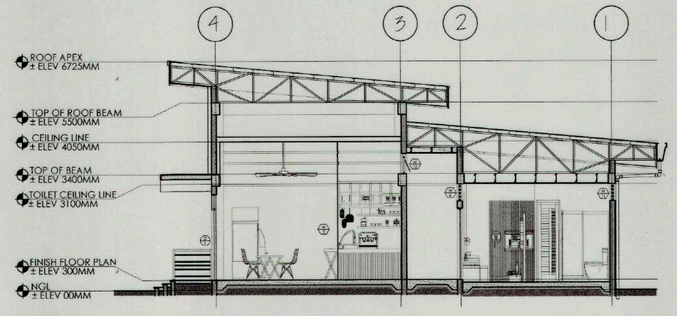

4 A 01 LONGITUDINAL SECTION
SCALE 1:100

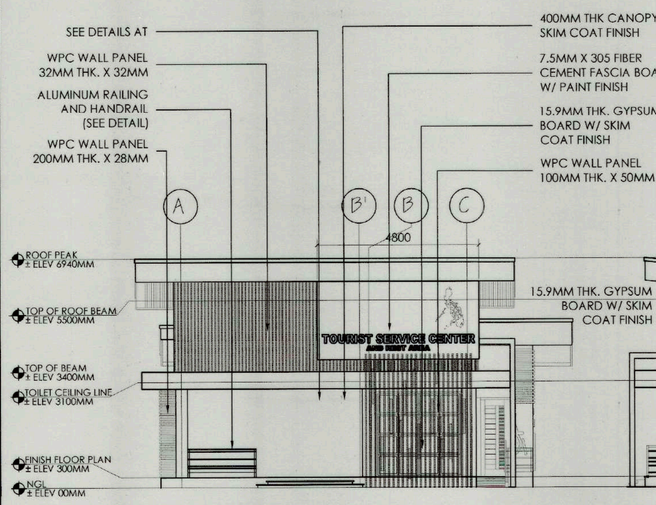

5 A 01 FRONT ELAVATION
SCALE 1:100

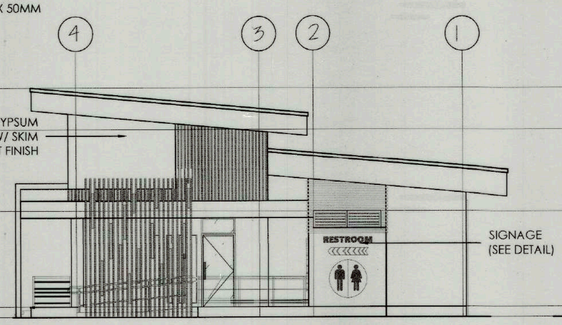

6 A 01 RIGHT ELAVATION
SCALE 1:100

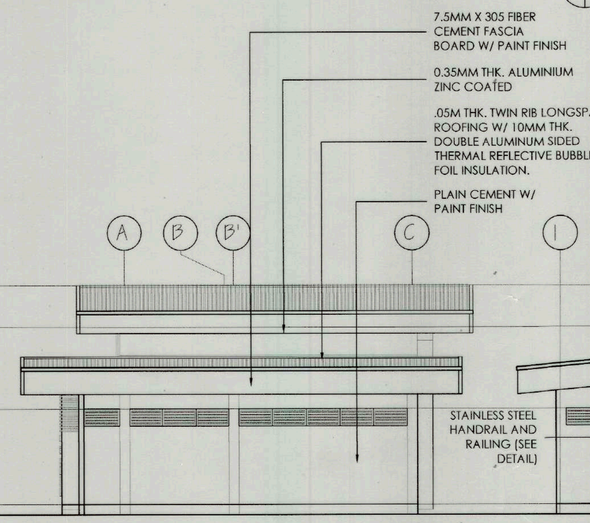

7 A 01 REAR ELAVATION
SCALE 1:100

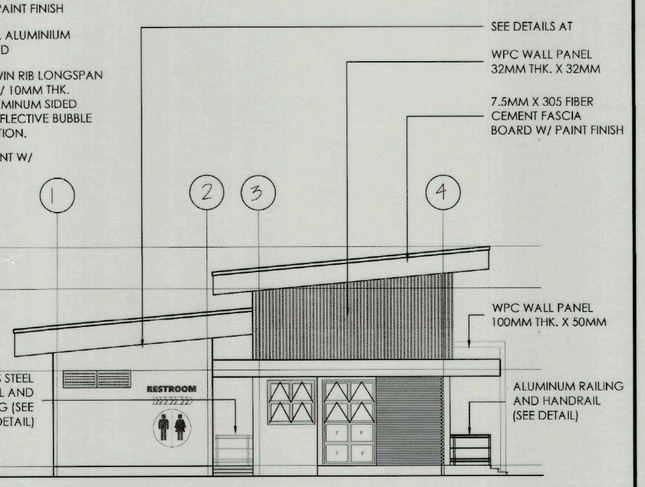

8 A 01 LEFT ELAVATION
SCALE 1:100

TIEZA TOURISM INFRASTRUCTURE AND ENTERPRISE ZONE AUTHORITY 6th & 7th FLR. TOWER 1 DOUBLE DRAGON PLAZA DOUBLE DRAGON MERIDIAN PARK, MACAPAGAL AVENUE CORNER EDSA EXTENSION BAY AREA PASAY CITY 1308	PROJECT TITLE/ LOCATION: **TOURIST SERVICE CENTER AND REST AREA** **BRGY. PEÑAPLATA, IGACOS, DAVAO DEL NORTE AND MANOLO FORTICH, BUKIDNON**	PROJECT EVALUATION AND PLANNING DEPARTMENT PREPARED BY: JOANA MARIE P. TUAÑO DRAWN BY: JPT DATE:	CHECKED BY: RADY E. ADAME MANAGER PROJECT PLANNING & DESIGN DIVISION	REVIEWED BY: JEOFFREY L. MACALALAD OIC - MANAGER PROJECT EVALUATION & PLANNING DEPARTMENT	RECOMMENDING APPROVAL: GREGORY A. OLLER ASSISTANT CHIEF OPERATING OFFICER ARCHITECTURAL & ENGINEERING SERVICES SECTOR	APPROVED BY: MARK T. LAPID CHIEF OPERATING OFFICER	SHEET CONTENTS: FLOOR PLAN ROOF PLAN ELEVATIONS SECTION ELEVATIONS REVISIONS:	R.A. 9266 THIS DRAWING AS INSTRUMENT OF SERVICE IS A PROPERTY OF TIEZA. IT SHALL BE UNLAWFUL TO DUPLICATE OR TO MAKE COPIES OF THIS DOCUMENT WITHOUT THE CONCENT OF TIEZA.	SHEET NO. A 01 1 16

PEPD.QF.02a

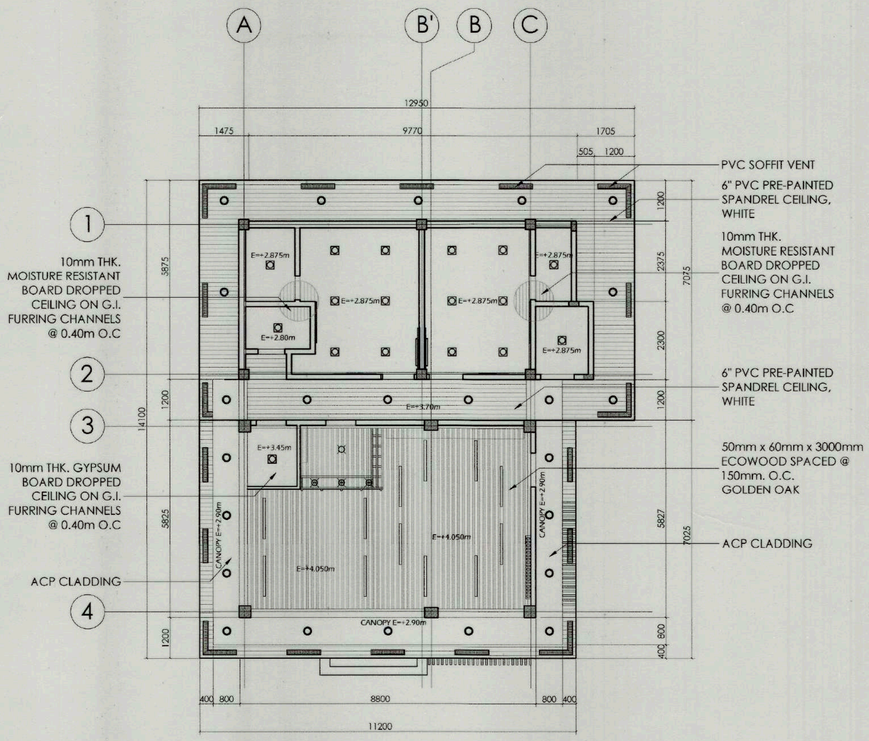

1 A 02 LOWER REFLECTED CEILING PLAN
SCALE 1:100

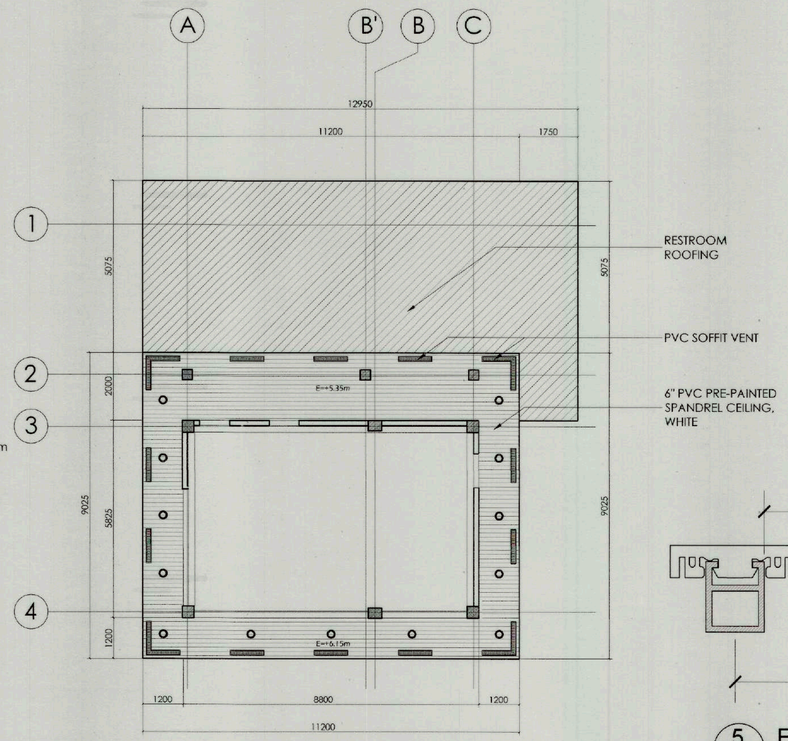

2 A 02 UPPER REFLECTED CEILING PLAN
SCALE 1:100

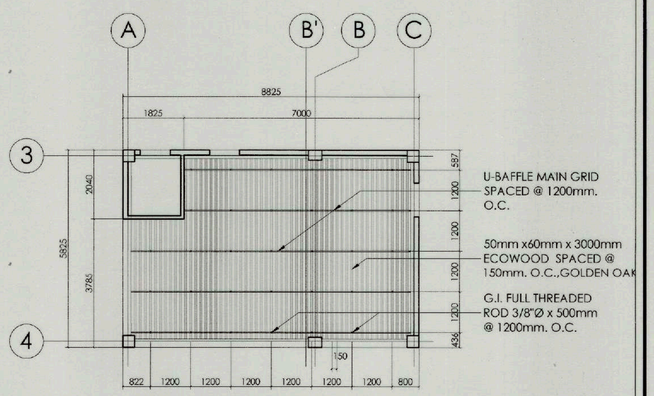

3 A 02 BAFFLE CEILING PLAN
SCALE 1:100

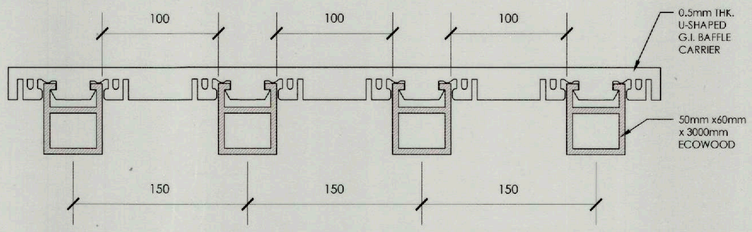

5 A 02 ECO-WOOD TO CARRIER CONNECTION DETAIL
SCALE NTS

LEGEND:

- 4"Ø DROPPED LED PINLIGHT IN 8"x8"X8" DECORATIVE WOOD BOX, COOL WHITE
- 4"Ø 16W LED PINLIGHT @ INCLINED PVC CEILING PANELS, COOL WHITE
- 4"Ø 16W RECESSED LED PINLIGHT
- CEILING FAN WITH 24W LED LIGHT
- 12W RATTAN HANGING PENDANT LIGHT
- 24W HANGING LINEAR LED CEILING LIGHT, WHITE (40 x 1200 x 70mm THK)
- 5PCS 12W LED TRACK SPOTLIGHT, BLACK
- 300 x 1000mm x 6mm THK. PVC SOFFIT VENT
- 300 x 1000mm x 6mm THK. PVC CORNER SOFFIT VENT

DROPPED LED PINLIGHT IN 8"x8"X8" DECORATIVE WOOD BOX, E=3.50m

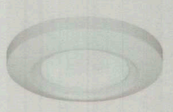

16W LED PINLIGHT @ INCLINED PVC CEILING PANELS

CEILING FAN WITH 24W LED LIGHT

12W RATTAN HANGING PENDANT LIGHT

50mm x 60mm x 3m ECO-WOOD (FOR BAFFLE CEILING)

UPVC SPANDREL CEILING, WHITE

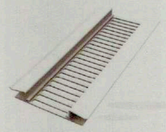

300mm 1000mm x 6mm THK. CONTINUOUS WOOD SOFFIT VENT

12W LED TRACK SPOTLIGHT, BLACK

24W HANGING LINEAR LED CEILING LIGHT, WHITE (40 x 1200 x 70mm THK)

4 A 02 CEILING FIXTURES
SCALE NTS

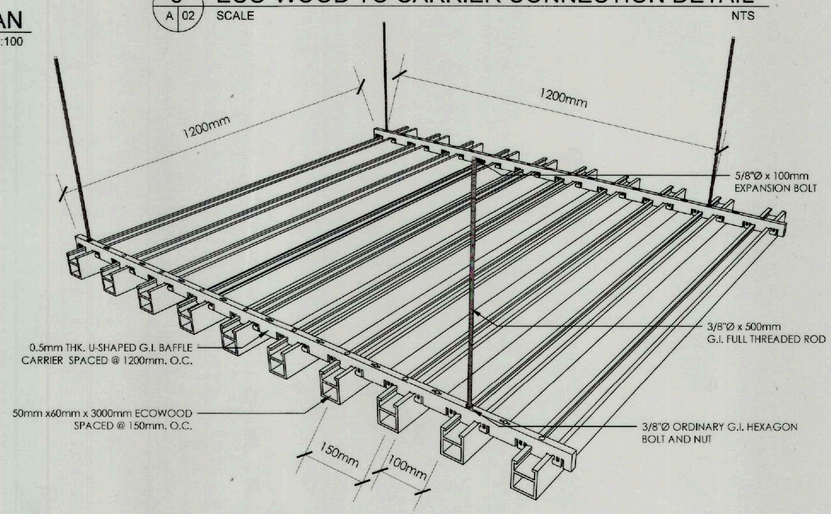

6 A 02 BAFFLE CEILING DETAIL
SCALE NTS

TIEZA
TOURISM INFRASTRUCTURE AND ENTERPRISE ZONE AUTHORITY
6th & 7th FLR. TOWER 1 DOUBLE DRAGON PLAZA
DOUBLE DRAGON MERIDIAN PARK, MACAPAGAL AVENUE
CORNER EDSA EXTENSION BAY AREA PASAY CITY 1308

PROJECT TITLE/ LOCATION:
TOURIST SERVICE CENTER AND REST AREA
BRGY. PEÑAPLATA, IGACOS, DAVAO DEL NORTE AND MANOLO FORTICH, BUKIDNON

PROJECT EVALUATION AND PLANNING DEPARTMENT

PREPARED BY:	CHECKED BY:	REVIEWED BY:	RECOMMENDING APPROVAL:	APPROVED BY:
MARIEL T. GUILAS	RADY E. ADAME	JEOFFREY L. MACALALAD	GREGORY A. OLLER	MARK T. LAPID
DRAWN BY: MTG	MANAGER, PROJECT PLANNING & DESIGN DIVISION	OIC - MANAGER, PROJECT EVALUATION & PLANNING DEPARTMENT	ASSISTANT CHIEF OPERATING OFFICER, ARCHITECTURAL & ENGINEERING SERVICES SECTOR	CHIEF OPERATING OFFICER
DATE:				

SHEET CONTENTS:
LOWER REFLECTED CEILING PLAN
UPPER REFLECTED CEILING PLAN
BAFFLE CEILING PLAN
CEILING FIXTURES
BAFFLE CEILING DETAIL

REVISIONS:

R.A. 9266

THIS DRAWING AS INSTRUMENT OF SERVICE IS A PROPERTY OF TIEZA. IT SHALL BE UNLAWFUL TO DUPLICATE OR TO MAKE COPIES OF THIS DOCUMENT WITHOUT THE CONSENT OF TIEZA.

SHEET NO. A 02 / 2 16

PEPD.QF.02a

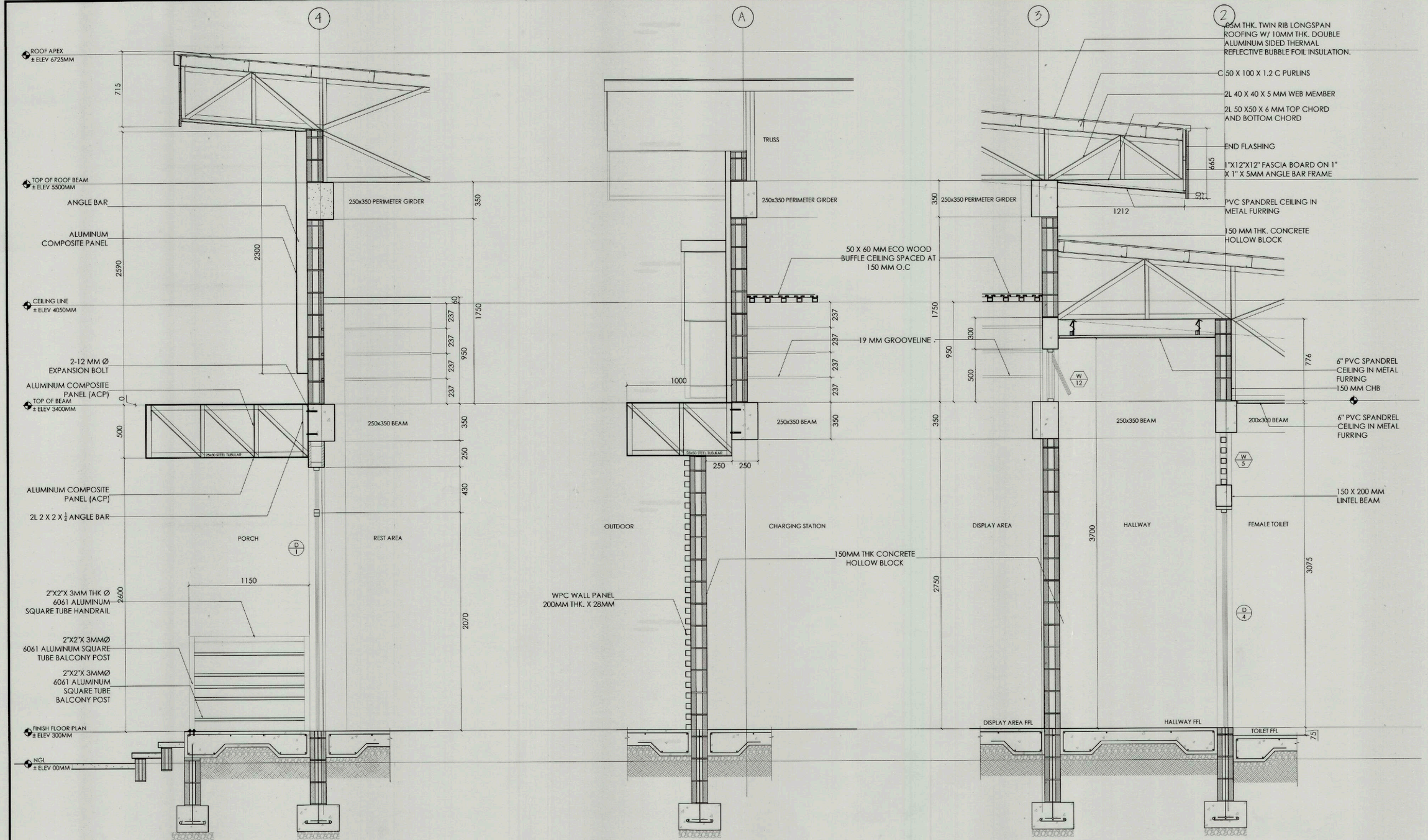

1 BAY SECTION
A 03 SCALE 1:20

2 BAY SECTION
A 03 SCALE 1:20

3 BAY SECTION
A 03 SCALE 1:20

TIEZA
TOURISM INFRASTRUCTURE AND ENTERPRISE ZONE AUTHORITY
6th & 7th FLR. TOWER 1 DOUBLE DRAGON PLAZA
DOUBLE DRAGON MERIDIAN PARK, MACAPAGAL AVENUE
CORNER EDSA EXTENSION BAY AREA PASAY CITY 1308

PROJECT TITLE/ LOCATION:
TOURIST SERVICE CENTER AND REST AREA
BRGY. PEÑAPLATA, IGACOS, DAVAO DEL NORTE AND MANOLO FORTICH, BUKIDNON

PROJECT EVALUATION AND PLANNING DEPARTMENT

PREPARED BY:	CHECKED BY:	REVIEWED BY:	RECOMMENDING APPROVAL:	APPROVED BY:
JOANA MARIE P. TUAÑO	RADY E. ADAME	JEOFFREY L. MACALALAD	GREGORY A. OLLER	MARK T. LAPID
DRAWN BY: JPT	MANAGER, PROJECT PLANNING & DESIGN DIVISION	OIC - MANAGER, PROJECT EVALUATION & PLANNING DEPARTMENT	ASSISTANT CHIEF OPERATING OFFICER, ARCHITECTURAL & ENGINEERING SERVICES SECTOR	CHIEF OPERATING OFFICER
DATE:				

SHEET CONTENTS: BAY SECTIONS
REVISIONS:

R.A. 9266: THIS DRAWING AS INSTRUMENT OF SERVICE IS A PROPERTY OF TIEZA. IT SHALL BE UNLAWFUL TO DUPLICATE OR TO MAKE COPIES OF THIS DOCUMENT WITHOUT THE CONCENT OF TIEZA.

SHEET NO. A 03 / 3 16

PEPD.QF.02a

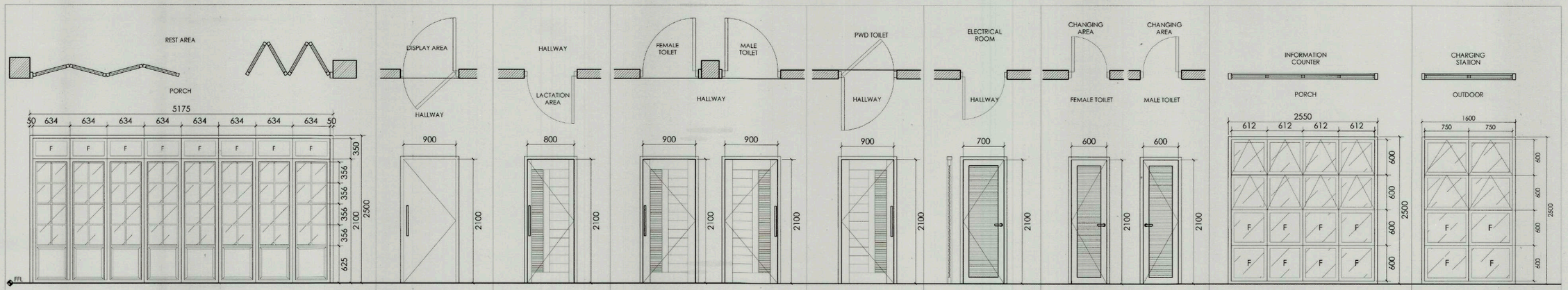

D 1 MAIN DOOR 1 SET	D 2 DISPLAY AREA 1 SET	D 3 LACTATION AREA 1 SET	D 4 FEMALE TOILET 1 SET	D 5 MALE TOILET 1 SET	D 6 PWD TOILET 1 SET	D 7 UTILITY ROOM 1 SET	D 8 D 9 SHOWER AREA (F & M) 1 SET	W 1 INFORMATION COUNTER (FACADE) 1 SET	W 2 CHARGING STATION 1 SET
8 PANEL DOUBLE GLAZED 6MM THK TEMPERED GLASS FRENCH TYPE BIFOLD DOOR IN POWDER COATED WOOD GRAIN FINISH ALUMINUM FRAME .	6MM THK CLEAR TEMPERED DOUBLE GLAZED SWING GLASS DOOR	1 SSINGLE SWING MAHOGANY SOLID PANELED DOOR WITH LOUVER IN 2"X6" DOOR JAMBET				SINGLE SWING MAHOGANY WOOD LOUVERED DOOR IN 2"X6" DOOR JAMB	SINGLE SWING LOUVER DOOR IN ALUMINUM FRAME WITH POWDER COATED WOOD FINISH	DOUBLE GLAZED FIXED AND AWNING WINDOW PANEL IN 6MM THK TEMPERED GLASS IN POWDER COATED WOOD FINISH ALUMINUM FRAME	
LOCKSET: LIFT AND TURN BIFOLD DOOR HANDLE SATIN CHROME 125MM BACKPLATE HEIGHT X 30MM BACKPLATE WIDTH X 130MM HANDLE LEVER LENGTH	LOCKSET ALUMINUM DOOR PULL HANDLE (DG-8991)	LOCKSET: DIRECT HARDWARE TUBULAR DOOR HANDLE LEVER SET GRADE 3 LOCKSET TL 815-BK-SN				LOCKSET: DIRECT HARDWARE TUBULAR DOOR HANDLE LEVER SET GRADE 3 LOCKSET TL 815-BK-SN		LOCKSET SINGLE POINT LOCKING HANDLE, SATIN FINISH HEAVY DUTY	
HINGES: 24PCS 282 BUTT HINGE ,2 PC 310 TOP TRACK, 1PC 1707 BOTTOM PIVOT , 1 PC 1710 TOP PIVOT, 1 PC BOTTOM PIVOT BRACKET , 1 PC TRACK STOP	HINGES: 2 PCS HEAVY DUTY FLOOR HINGE BTS80	HINGES: 3 SETS BALL BEARING BUTT HINGE STAINLESS STEEL				HINGES: 3 SETS BALL BEARING BUTT HINGE STAINLESS STEEL		HINGES: 2 PCS. - HEAVY DUTY STAINLESS STEEL 4-BAR HINGES	

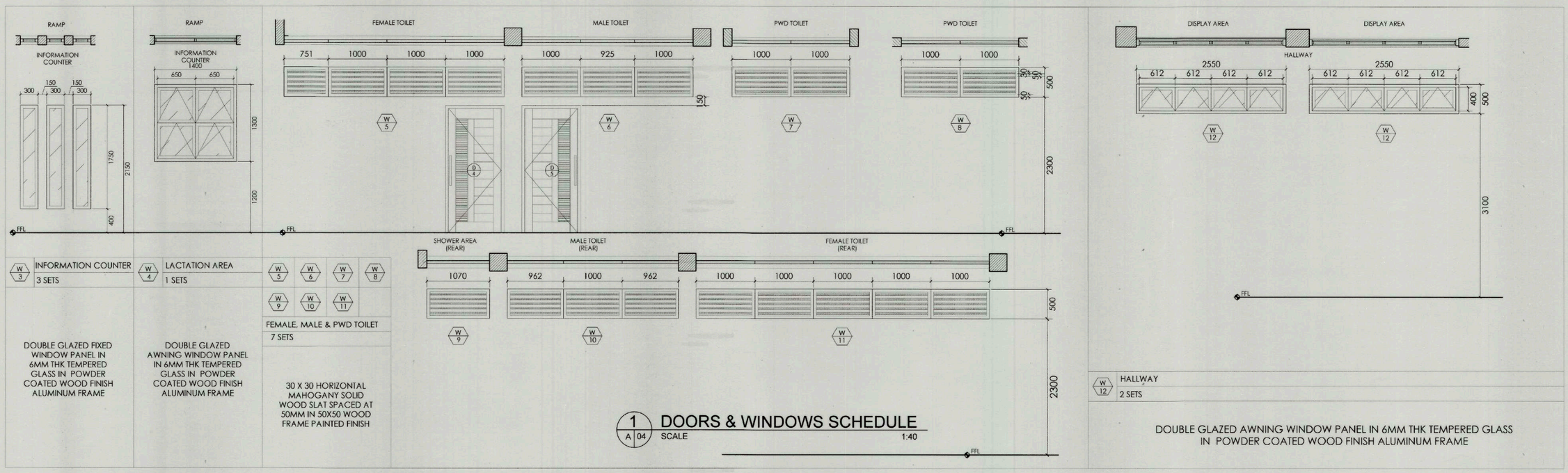

W 3 INFORMATION COUNTER 3 SETS	W 4 LACTATION AREA 1 SETS	W 5 W 6 W 7 W 8 W 9 W 10 W 11 FEMALE, MALE & PWD TOILET 7 SETS		W 12 HALLWAY 2 SETS
DOUBLE GLAZED FIXED WINDOW PANEL IN 6MM THK TEMPERED GLASS IN POWDER COATED WOOD FINISH ALUMINUM FRAME	DOUBLE GLAZED AWNING WINDOW PANEL IN 6MM THK TEMPERED GLASS IN POWDER COATED WOOD FINISH ALUMINUM FRAME	30 X 30 HORIZONTAL MAHOGANY SOLID WOOD SLAT SPACED AT 50MM IN 50X50 WOOD FRAME PAINTED FINISH		DOUBLE GLAZED AWNING WINDOW PANEL IN 6MM THK TEMPERED GLASS IN POWDER COATED WOOD FINISH ALUMINUM FRAME

1 / A 04 **DOORS & WINDOWS SCHEDULE**
SCALE 1:40

TIEZA
TOURISM INFRASTRUCTURE AND ENTERPRISE ZONE AUTHORITY
6th & 7th FLR. TOWER 1 DOUBLE DRAGON PLAZA
DOUBLE DRAGON MERIDIAN PARK, MACAPAGAL AVENUE
CORNER EDSA EXTENSION BAY AREA PASAY CITY 1308

PROJECT TITLE/ LOCATION:
TOURIST SERVICE CENTER AND REST AREA
BRGY. PEÑAPLATA, IGACOS, DAVAO DEL NORTE AND MANOLO FORTICH, BUKIDNON

PROJECT EVALUATION AND PLANNING DEPARTMENT

PREPARED BY:	CHECKED BY:	REVIEWED BY:	RECOMMENDING APPROVAL:	APPROVED BY:
JOANA MARIE P. TUAÑO	RADY E. ADAME	JEOFFREY L. MACALALAD	GREGORY A. OLLER	MARK T. LAPID
DRAWN BY: JPT	MANAGER PROJECT PLANNING & DESIGN DIVISION	OIC - MANAGER PROJECT EVALUATION & PLANNING DEPARTMENT	ASSISTANT CHIEF OPERATING OFFICER ARCHITECTURAL & ENGINEERING SERVICES SECTOR	CHIEF OPERATING OFFICER
DATE:				

SHEET CONTENTS: DOORS & WINDOWS SCHEDULE
REVISIONS:

R.A. 9266
THIS DRAWING AS INSTRUMENT OF SERVICE IS A PROPERTY OF TIEZA. IT SHALL BE UNLAWFUL TO DUPLICATE OR TO MAKE COPIES OF THIS DOCUMENT WITHOUT THE CONCENT OF TIEZA.

SHEET NO. A 04 / 4 16

PEPD.QF.02a

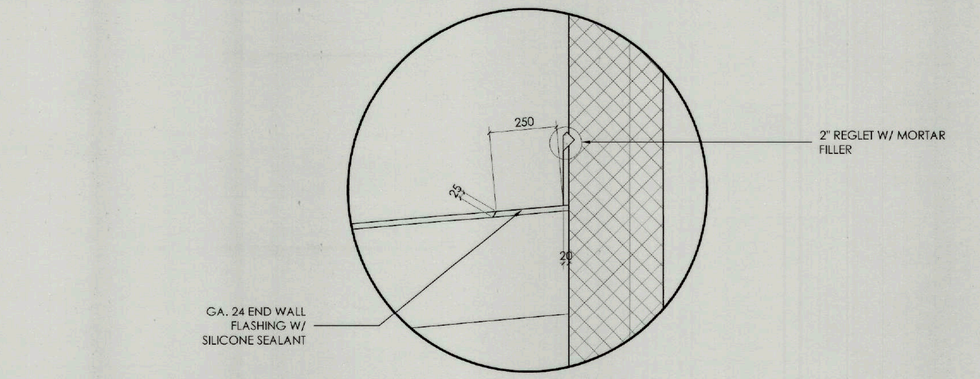

3 ROOF FLASHING DETAIL
A 05 SCALE 1:50

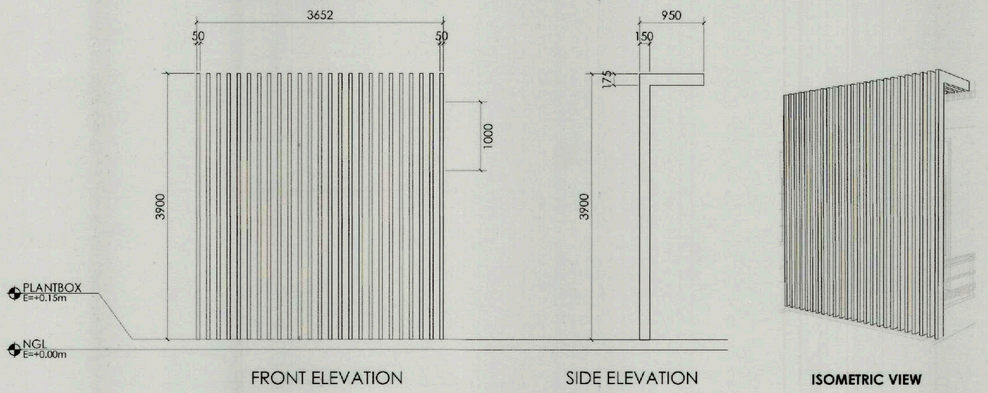

2 WOOD SLATS DETAILS (FRONT)
A 05 SCALE 1:50

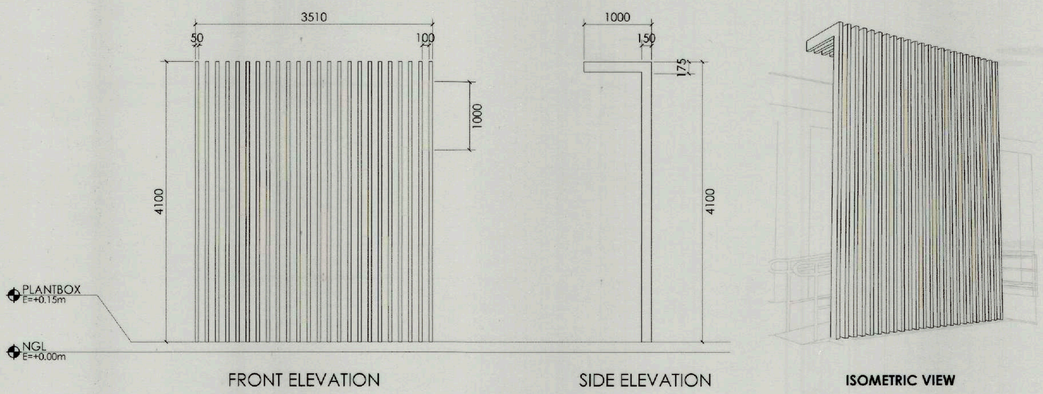

1 WOOD SLATS DETAILS (RIGHT SIDE)
A 05 SCALE 1:50

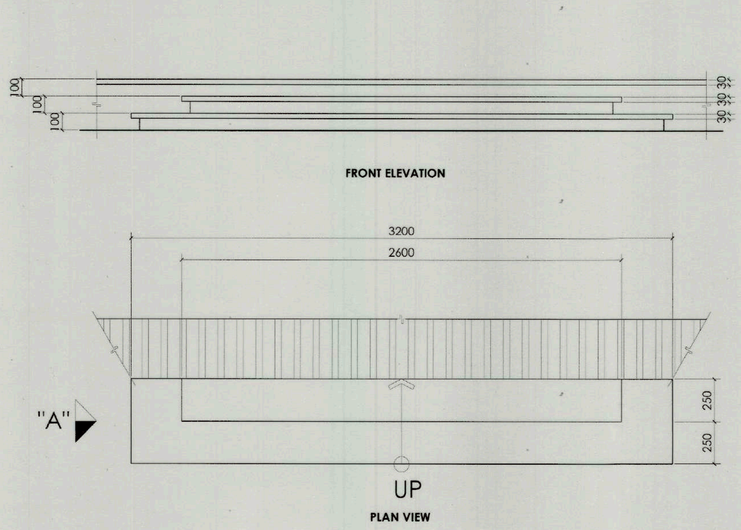

5 STAIRS DETAILS (FRONT)
A 05 SCALE 1:20

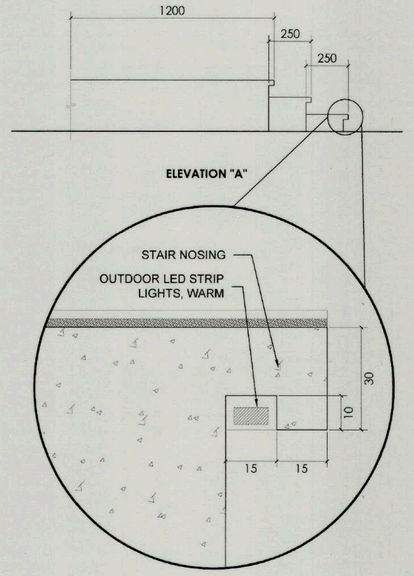

7 BLOW-UP DETAIL
A 05 SCALE 1:1

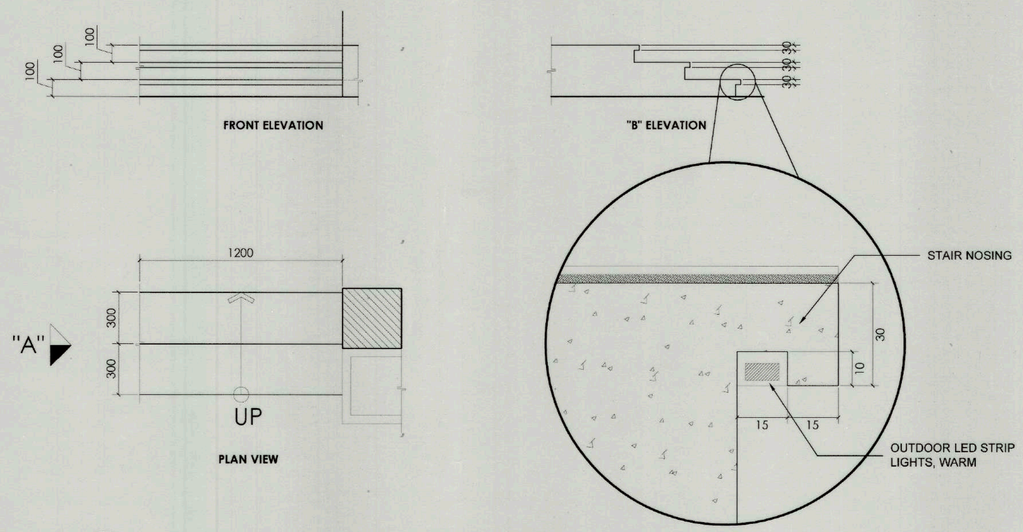

05 STAIRS DETAILS (LEFT SIDE)
A 08 SCALE 1:20

6 BLOW-UP DETAIL
A 05 SCALE 1:1

TIEZA TOURISM INFRASTRUCTURE AND ENTERPRISE ZONE AUTHORITY 6th & 7th FLR. TOWER 1 DOUBLE DRAGON PLAZA DOUBLE DRAGON MERIDIAN PARK, MACAPAGAL AVENUE CORNER EDSA EXTENSION BAY AREA PASAY CITY 1308	PROJECT TITLE/ LOCATION: **TOURIST SERVICE CENTER AND REST AREA** **BRGY. PEÑAPLATA, IGACOS, DAVAO DEL NORTE AND MANOLO FORTICH, BUKIDNON**	PROJECT EVALUATION AND PLANNING DEPARTMENT PREPARED BY: AILYN CLAIRE L. BERNESTO DRAWN BY: ALB DATE:	CHECKED BY: RADY E. ADAME MANAGER PROJECT PLANNING & DESIGN DIVISION	REVIEWED BY: JEOFFREY L. MACALALAD OIC - MANAGER PROJECT EVALUATION & PLANNING DEPARTMENT	RECOMMENDING APPROVAL: GREGORY A. OLLER ASSISTANT CHIEF OPERATING OFFICER ARCHITECTURAL & ENGINEERING SERVICES SECTOR	APPROVED BY: MARK T. LAPID CHIEF OPERATING OFFICER	SHEET CONTENTS: WOOD SLATS DETAILS (RIGHT SIDE) WOOD SLATS DETAILS (FRONT) ROOF FLASHING DETAIL STAIRS DETAILS (LEFT SIDE) STAIRS DETAILS (FRONT) BLOW-UP DETAILS REVISIONS:	R.A. 9266 THIS DRAWING AS INSTRUMENT OF SERVICE IS A PROPERTY OF TIEZA. IT SHALL BE UNLAWFUL TO DUPLICATE OR TO MAKE COPIES OF THIS DOCUMENT WITHOUT THE CONCENT OF TIEZA.	SHEET NO. A 05 5 16

PEPD.QF.02a

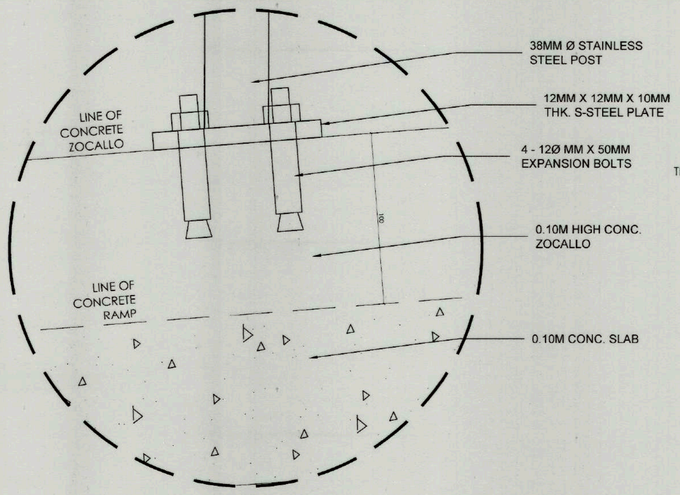

2 RAMP RAILING CONNECTION DETAIL
A 06 SCALE 1:2

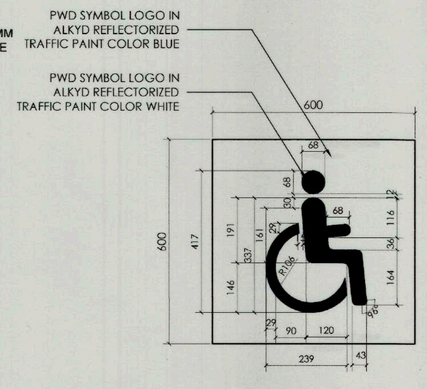

3 PWD RAMP SIGNAGE
A 06 SCALE 1:10

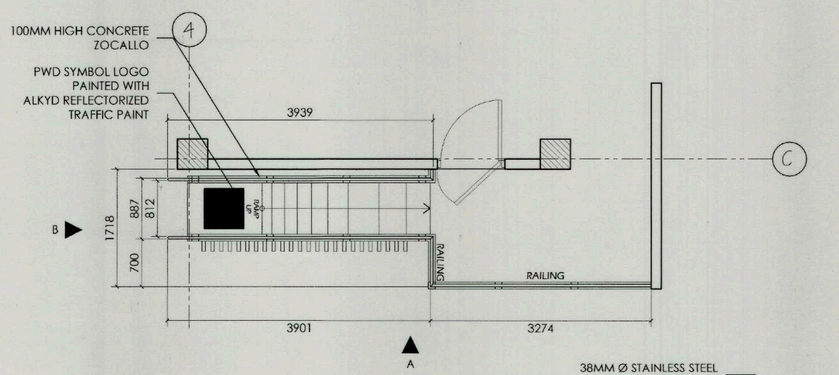

PLAN VIEW

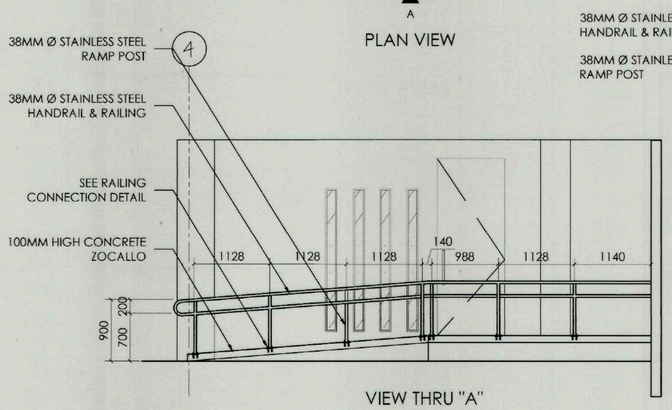

VIEW THRU "A"

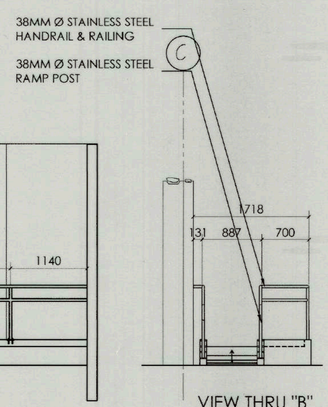

VIEW THRU "B"

1 RAMP DETAILS
A 06 SCALE 1:50

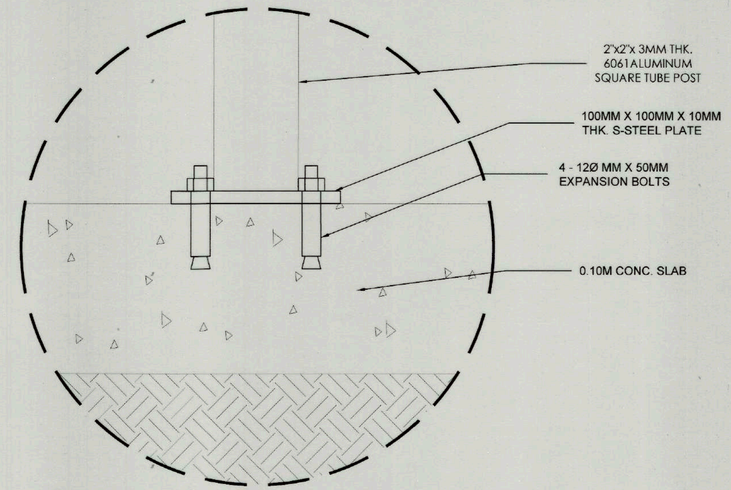

5 RAILING CONNECTION DETAIL
A 06 SCALE 1:2

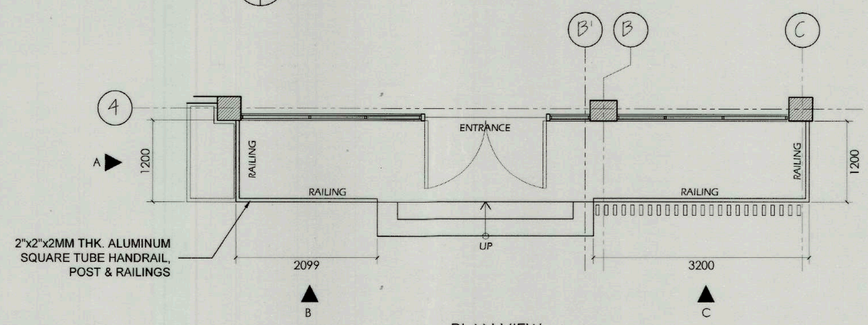

PLAN VIEW

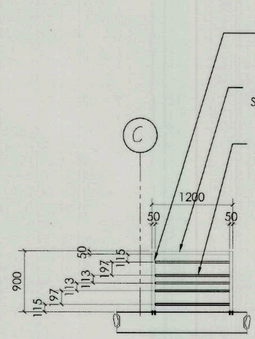

VIEW THRU "A"

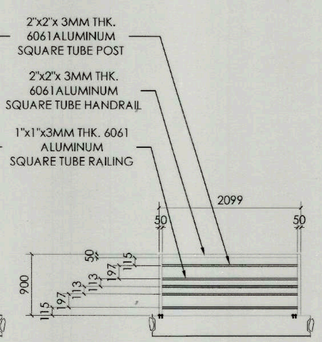

VIEW THRU "B"

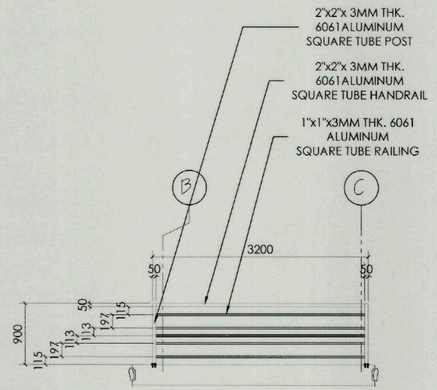

VIEW THRU "C"

4 RAILING DETAILS
A 06 SCALE 1:50

TIEZA
TOURISM INFRASTRUCTURE AND ENTERPRISE ZONE AUTHORITY
6th & 7th FLR. TOWER 1 DOUBLE DRAGON PLAZA
DOUBLE DRAGON MERIDIAN PARK, MACAPAGAL AVENUE
CORNER EDSA EXTENSION BAY AREA PASAY CITY 1308

PROJECT TITLE/ LOCATION:
TOURIST SERVICE CENTER AND REST AREA
BRGY. PEÑAPLATA, IGACOS, DAVAO DEL NORTE AND MANOLO FORTICH, BUKIDNON

PROJECT EVALUATION AND PLANNING DEPARTMENT

PREPARED BY:	CHECKED BY:	REVIEWED BY:	RECOMMENDING APPROVAL:	APPROVED BY:
AILYN CLAIRE L. BERNESTO	RADY E. ADAME	JEOFFREY L. MACALALAD	GREGORY A. OLLER	MARK T. LAPID
DRAWN BY: ALB	MANAGER, PROJECT PLANNING & DESIGN DIVISION	OIC - MANAGER, PROJECT EVALUATION & PLANNING DEPARTMENT	ASSISTANT CHIEF OPERATING OFFICER, ARCHITECTURAL & ENGINEERING SERVICES SECTOR	CHIEF OPERATING OFFICER
DATE:				

SHEET CONTENTS:
RAMP DETAILS
RAMP RAILING CONN. DETAIL
PWD RAMP SIGNAGE
RAILING DETAILS
RAILING CONN. DETAIL

REVISIONS:

R.A. 9266
THIS DRAWING AS INSTRUMENT OF SERVICE IS A PROPERTY OF TIEZA. IT SHALL BE UNLAWFUL TO DUPLICATE OR TO MAKE COPIES OF THIS DOCUMENT WITHOUT THE CONCENT OF TIEZA.

SHEET NO. A 06 / 6 16

PEPD.QF.02a

FURNITURE SCHEDULE

WIRE CHAIR

SPECIFICATION:
MATERIAL: WIRE CHAIR AND METAL FRAME INCLUDED BLACK PU SEAT CUSHION

DIMENSION: L 500MM X W 490MM X H850MM

QUANTITY: 14 SETS | LOCATION:

INDUSTRIAL WOODEN TABLE

SPECIFICATION:
TABLE TOP : 650MM x 800MM SOLID PINE IN CLEAR ACRYLIC LACQUER SATIN FINISH

UNDERFRAME/ PANEL: 2" x 2" TUBULAR STEEL IN BLACK POWDER COATED FINISH WITH 10cm x 10cm SQUARE TOP PLATE

DIMENSION: L 800MM x W 650MM x H 750MM

QUANTITY: 6 SETS | LOCATION:

CHARGING TABLE

SPECIFICATION:
TABLE TOP : 2000MM x 400MM SOLID PINE IN CLEAR ACRYLIC LACQUER SATIN FINISH

UNDERFRAME/ PANEL: 50MM X 50MM SQUARE ALUMINUM POWDER COATED FINISH (BLACK)

DIMENSION: L 2000MM x W 400MM x H 900MM

QUANTITY: 1 SETS | LOCATION: CHARGING STATION

INFORMATION DESK

SPECIFICATION:
TABLE TOP : 18MM THK. X 1800M L X 600MM MDF BOARD WITH HIGH PRESSURE LAMINATE (HPL) IN WOOD FINISH WITH 4MM THK. ACRYLIC PARTITION . 8MM THK. X 35 MM WPC WALL PANEL(CEDAR)

DIMENSION: L 800MM x W 650MM x H 750MM

QUANTITY: 1 SETS | LOCATION: TOURIST INFORMATION COUNTER

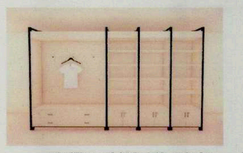

INDUSTRIAL WOODEN DISPLAY RACK

SPECIFICATION:
FRAME : 2" x 2" TUBULAR STEEL IN BLACK POWDER COATED FINISH

SHELF: 25 mm THK. MDF BOARD WITH HIGH PRESSURE LAMINATE (HPL) IN OAKWOOD FINISH

DIMENSION: L 4100MM x W 400MM x H 2420MM

QUANTITY: 1 SETS | LOCATION: TOURIST INFORMATION COUNTER

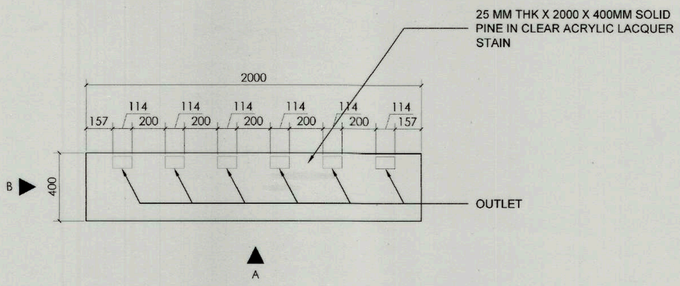

PLAN VIEW

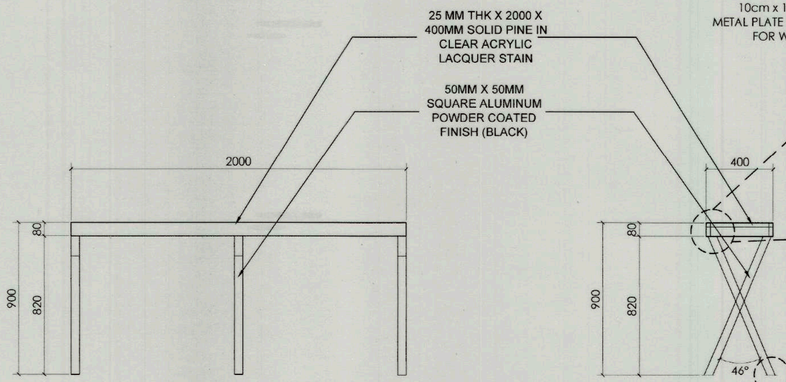

ELEVATION "A"

ELEVATION "B"

1 A 07 CHARGING STATION DETAIL
SCALE 1:20

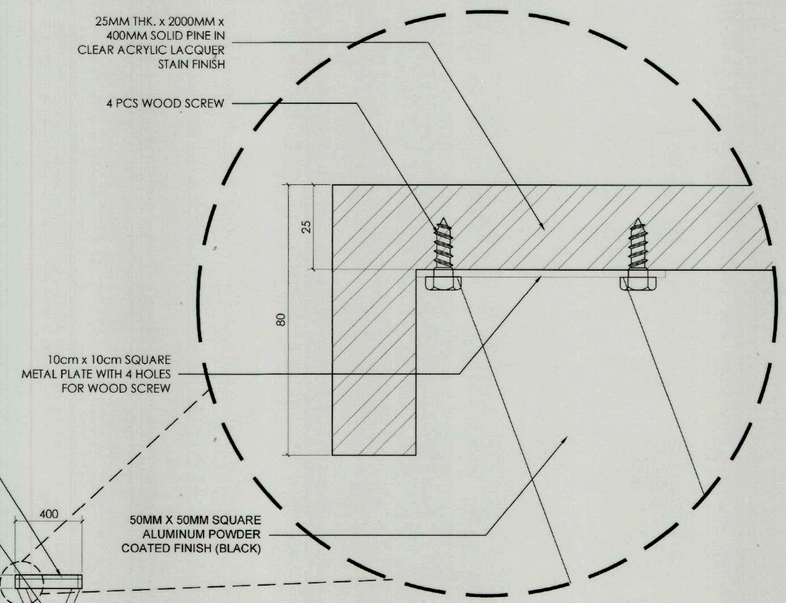

2 A 06 BLOW-UP DETAIL "A"
SCALE 1:1

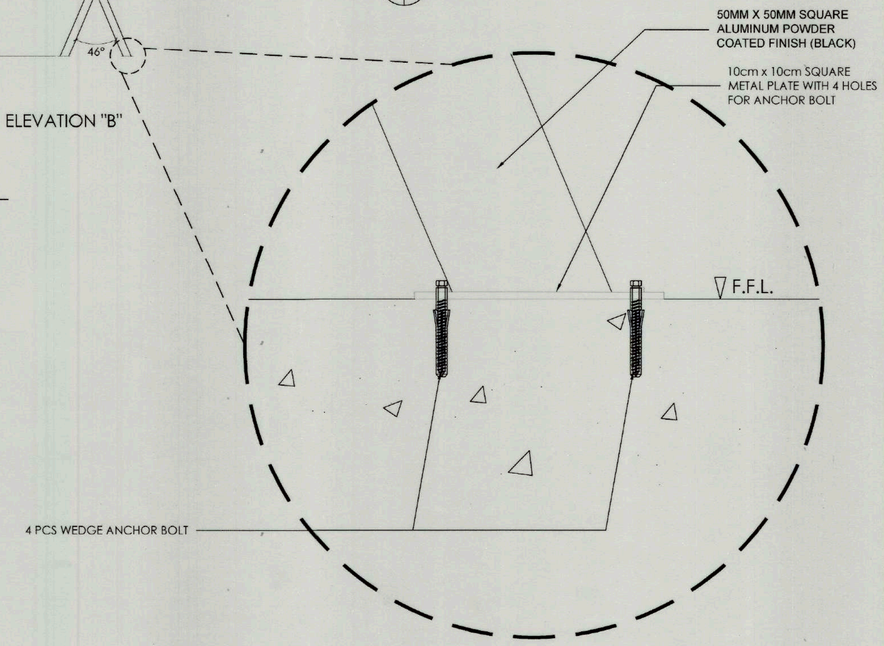

3 A 07 BLOW-UP DETAIL "B"
SCALE 1:1

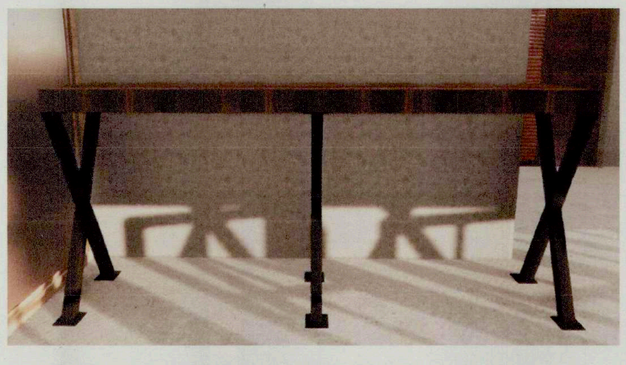

FRONT VIEW

ISOMETRIC VIEW

CHARGING TABLE PERSPECTIVE VIEW

TIEZA TOURISM INFRASTRUCTURE AND ENTERPRISE ZONE AUTHORITY 6th & 7th FLR. TOWER 1 DOUBLE DRAGON PLAZA DOUBLE DRAGON MERIDIAN PARK, MACAPAGAL AVENUE CORNER EDSA EXTENSION BAY AREA PASAY CITY 1308	PROJECT TITLE/ LOCATION:	PROJECT EVALUATION AND PLANNING DEPARTMENT			RECOMMENDING APPROVAL:	APPROVED BY:	SHEET CONTENTS:	R.A. 9266	SHEET NO.
	TOURIST SERVICE CENTER AND REST AREA BRGY. PEÑAPLATA, IGACOS, DAVAO DEL NORTE AND MANOLO FORTICH, BUKIDNON	PREPARED BY: SHAIRA B. DE LEON DRAWN BY: SBD DATE:	CHECKED BY: RADY E. ADAME MANAGER PROJECT PLANNING & DESIGN DIVISION	REVIEWED BY: JEOFFREY L. MACALALAD OIC - MANAGER PROJECT EVALUATION & PLANNING DEPARTMENT	GREGORY A. OLYER ASSISTANT CHIEF OPERATING OFFICER ARCHITECTURAL & ENGINEERING SERVICES SECTOR	MARK T. LAPID CHIEF OPERATING OFFICER	FURNITURE SCHEDULE CHARGING STATION DETAIL BLOW-UP DETAILS REVISIONS:	THIS DRAWING AS INSTRUMENT OF SERVICE IS A PROPERTY OF TIEZA. IT SHALL BE UNLAWFUL TO DUPLICATE OR TO MAKE COPIES OF THIS DOCUMENT WITHOUT THE CONCENT OF TIEZA.	A 07 7 16

PEPD.QF.02a

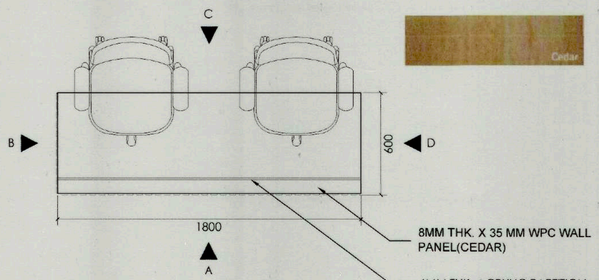

PLAN VIEW

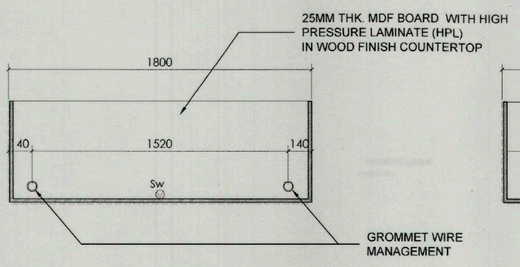

COUNTER TOP DETAIL

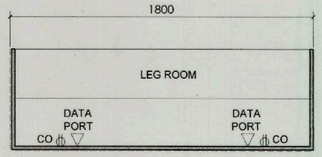

SECTION "F"

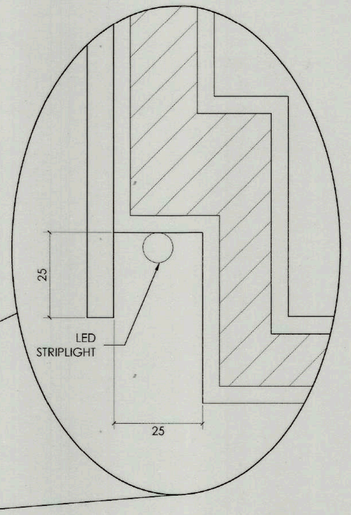

INSIDE VIEW

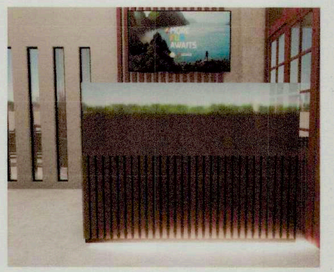

OUTSIDE VIEW

INFORMATION COUNTER PERSPECTIVE VIEW

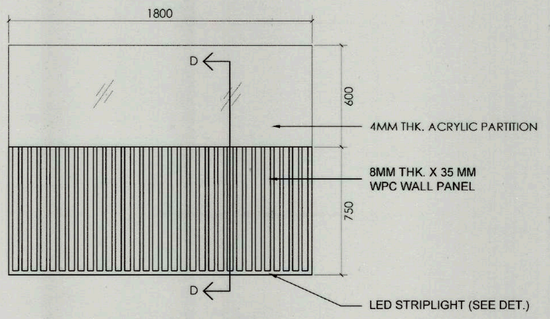

ELEVATION "A"

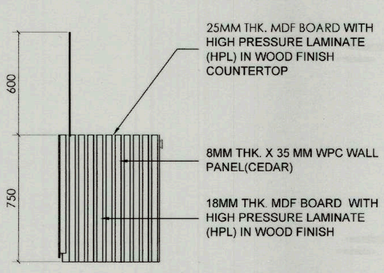

ELEVATION "B"

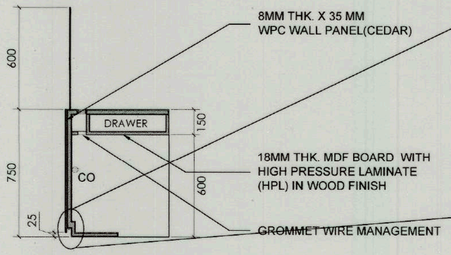

SECTION "D"

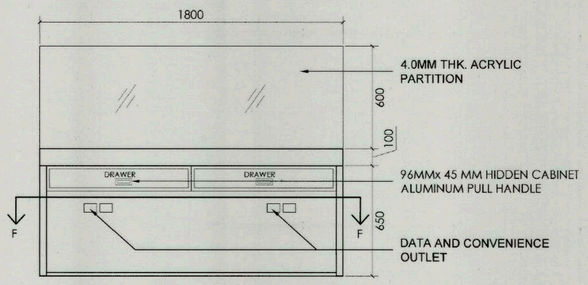

ELEVATION "C"

HIDDEN CABINET ALUMINUM PULL HANDLE

1 / A 08 INFORMATION COUNTER DETAIL

SCALE 1:20

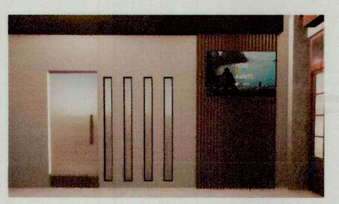

INFORMATION COUNTER WALL PERSPECTIVE VIEW

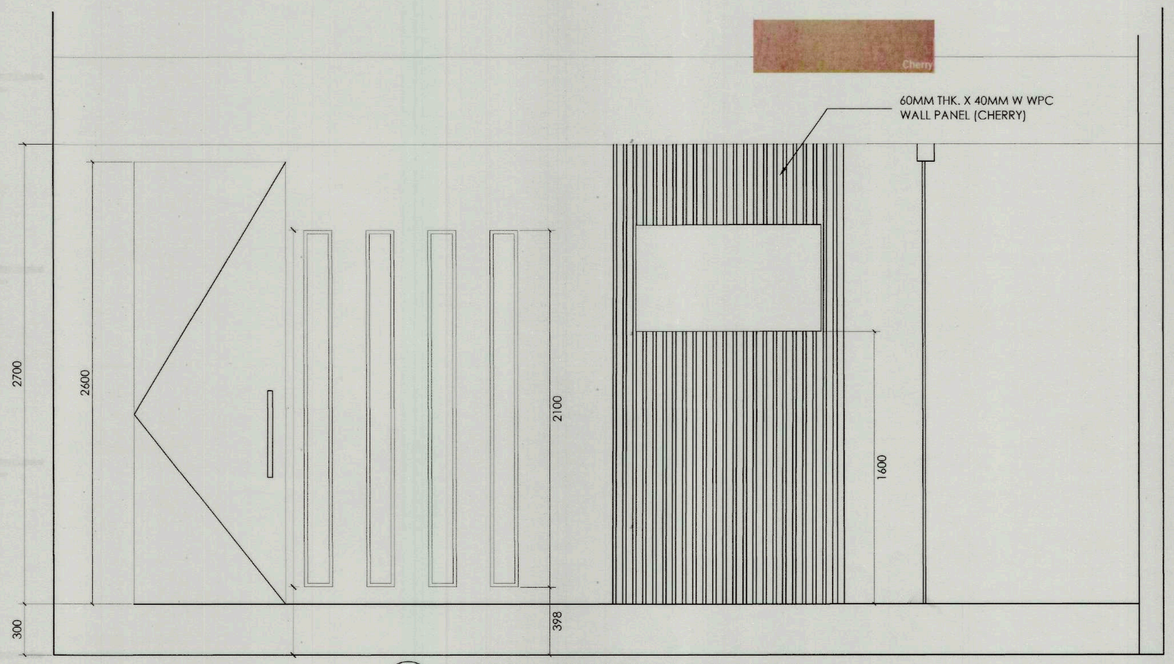

2 / A 08 INFORMATION COUNTER WALL

SCALE 1:20

TIEZA TOURISM INFRASTRUCTURE AND ENTERPRISE ZONE AUTHORITY 6th & 7th FLR. TOWER 1 DOUBLE DRAGON PLAZA DOUBLE DRAGON MERIDIAN PARK, MACAPAGAL AVENUE CORNER EDSA EXTENSION BAY AREA PASAY CITY 1308	PROJECT TITLE/ LOCATION: **TOURIST SERVICE CENTER AND REST AREA** **BRGY. PEÑAPLATA, IGACOS, DAVAO DEL NORTE AND MANOLO FORTICH, BUKIDNON**	PROJECT EVALUATION AND PLANNING DEPARTMENT PREPARED BY: SHAIRA B. DE LEON DRAWN BY: SBD DATE:	CHECKED BY: RADY E. ADAME MANAGER PROJECT PLANNING & DESIGN DIVISION	REVIEWED BY: JEOFFREY L. MACALALAD OIC - MANAGER PROJECT EVALUATION & PLANNING DEPARTMENT	RECOMMENDING APPROVAL: GREGORY A. OLLER ASSISTANT CHIEF OPERATING OFFICER ARCHITECTURAL & ENGINEERING SERVICES SECTOR	APPROVED BY: MARK T. LAPID CHIEF OPERATING OFFICER	SHEET CONTENTS: INFORMATION COUNTER DETAIL INFORMATION COUNTER WALL REVISIONS:	R.A. 9266 THIS DRAWING AS INSTRUMENT OF SERVICE IS A PROPERTY OF TIEZA. IT SHALL BE UNLAWFUL TO DUPLICATE OR TO MAKE COPIES OF THIS DOCUMENT WITHOUT THE CONCENT OF TIEZA.	SHEET NO. A 08 8 16

PEPD.QF.02a

SPECIFICATION

WIRE CHAIR	INDUSTRIAL WOODEN TABLE
SPECIFICATION: MATERIAL: WIRE CHAIR AND METAL FRAME INCLUDED BLACK PU SEAT CUSHION DIMENSION: L 500MM X W 490MM X H550MM	SPECIFICATION: TABLE TOP : 650MM x 800MM SOLID PINE IN CLEAR ACRYLIC LACQUER SATIN FINISH UNDERFRAME/ PANEL: 2" x 2" TUBULAR STEEL IN BLACK POWDER COATED FINISH WITH 10cm x 10cm SQUARE TOP PLATE DIMENSION: L 800MM x W 650MM x H 750MM
QUANTITY: 14 SETS / LOCATION:	QUANTITY: 6 SETS / LOCATION: TOURIST SERVICE CENTER

P E R S P E C T I V E

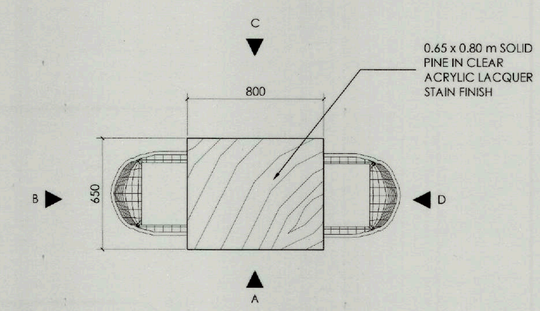

PLAN VIEW

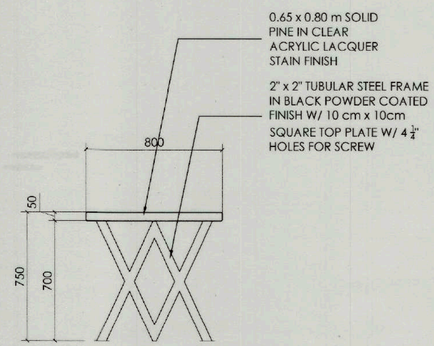

ELEVATION "A" & "C"

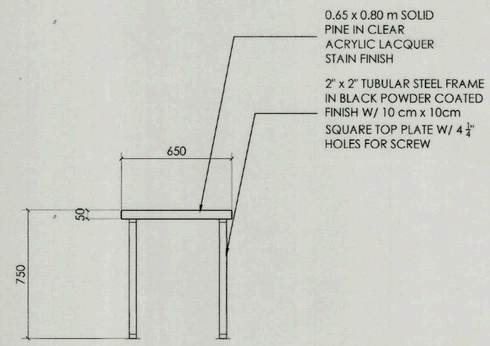

ELEVATION "B" & "D"

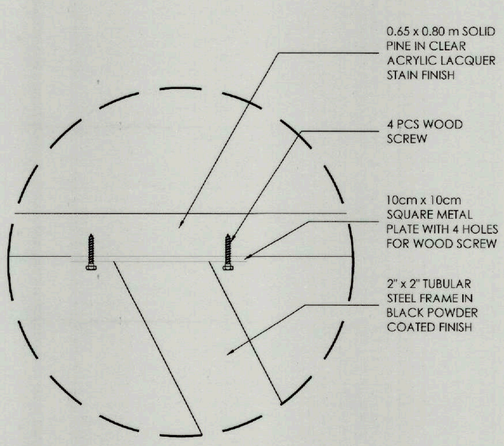

5 / A 09 RAILING CONNECTION DETAIL
SCALE 1:2

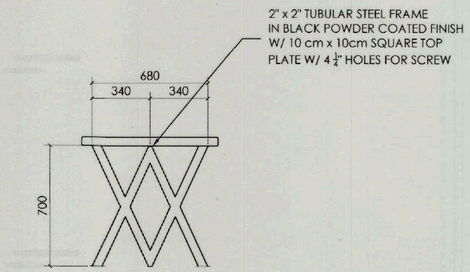

DETAIL OF X-FRAME METAL LEGS

4 / A 09 COFFEE TABLE DETAILS
SCALE 1:20

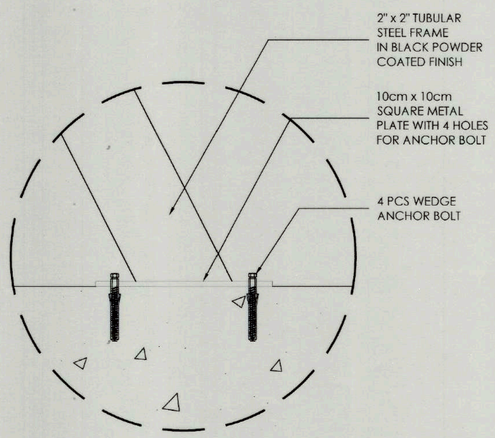

5 / A 09 RAILING CONNECTION DETAIL
SCALE 1:2

TIEZA
TOURISM INFRASTRUCTURE AND ENTERPRISE ZONE AUTHORITY
6th & 7th FLR. TOWER 1 DOUBLE DRAGON PLAZA
DOUBLE DRAGON MERIDIAN PARK, MACAPAGAL AVENUE
CORNER EDSA EXTENSION BAY AREA PASAY CITY 1308

PROJECT TITLE/ LOCATION:
TOURIST SERVICE CENTER AND REST AREA
BRGY. PEÑAPLATA, IGACOS, DAVAO DEL NORTE AND MANOLO FORTICH, BUKIDNON

PROJECT EVALUATION AND PLANNING DEPARTMENT

PREPARED BY:	CHECKED BY:	REVIEWED BY:	RECOMMENDING APPROVAL:	APPROVED BY:
SHEILA MAE A. LAGAT	RADY E. ADAME	JEOFFREY L. MACALALAD	GREGORY A. OLLER	MARK T. LAPID
DRAWN BY: SAL	MANAGER, PROJECT PLANNING & DESIGN DIVISION	OIC - MANAGER, PROJECT EVALUATION & PLANNING DEPARTMENT	ASSISTANT CHIEF OPERATING OFFICER, ARCHITECTURAL & ENGINEERING SERVICES SECTOR	CHIEF OPERATING OFFICER
DATE:				

SHEET CONTENTS: COFFEE TABLE PLAN
REVISIONS:

R.A. 9266

THIS DRAWING AS INSTRUMENT OF SERVICE IS A PROPERTY OF TIEZA. IT SHALL BE UNLAWFUL TO DUPLICATE OR TO MAKE COPIES OF THIS DOCUMENT WITHOUT THE CONCENT OF TIEZA.

SHEET NO. A 09 / 9 16

PEPD.QF.02a

SPECIFICATION

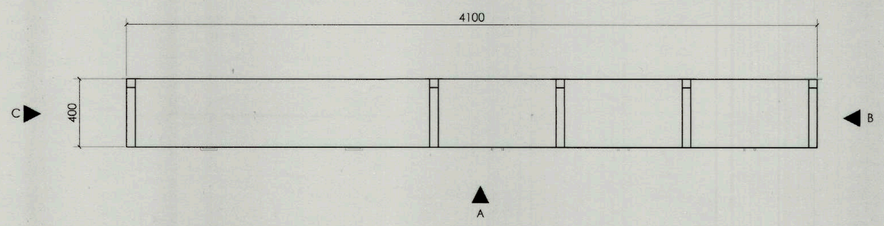

PLAN VIEW

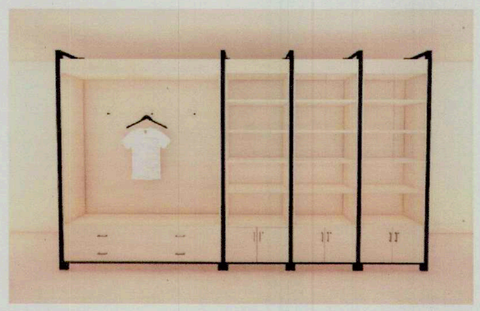

PERSPECTIVE

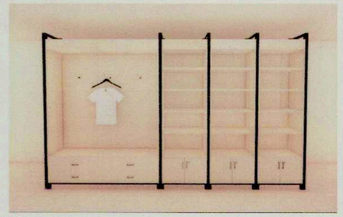

INDUSTRIAL WOODEN TABLE

SPECIFICATION:
FRAME : 2" x 2" TUBULAR STEEL IN BLACK POWDER COATED FINISH

SHELF: 25 mm THK. MDF BOARD WITH HIGH PRESSURE LAMINATE (HPL) IN OAKWOOD FINISH

DIMENSION: L 4100MM x W 400MM x H 2420MM

QUANTITY: 1 SET	LOCATION: TOURIST SERVICE CENTER

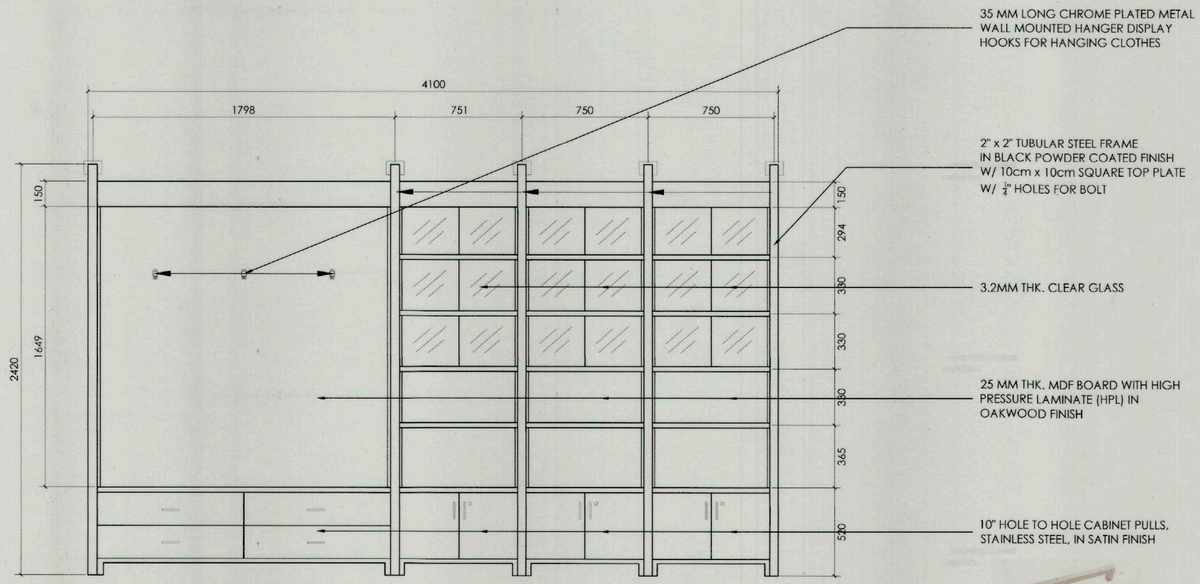

ELEVATION "A"

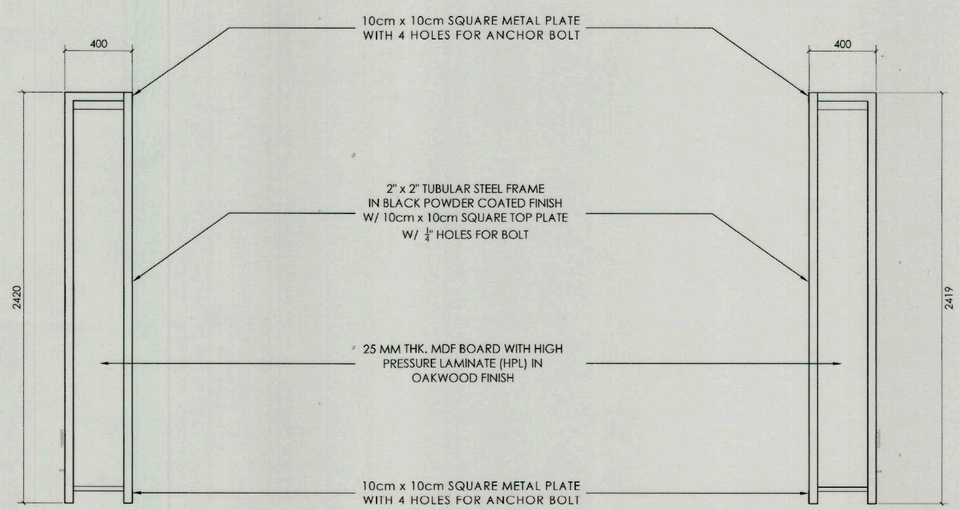

ELEVATION "B"

ELEVATION "C"

5 / A 10 **DISPLAY RACK DETAILS**
SCALE 1:20

TIEZA TOURISM INFRASTRUCTURE AND ENTERPRISE ZONE AUTHORITY 6th & 7th FLR. TOWER 1 DOUBLE DRAGON PLAZA DOUBLE DRAGON MERIDIAN PARK, MACAPAGAL AVENUE CORNER EDSA EXTENSION BAY AREA PASAY CITY 1308	PROJECT TITLE/ LOCATION:	PROJECT EVALUATION AND PLANNING DEPARTMENT			RECOMMENDING APPROVAL:	APPROVED BY:	SHEET CONTENTS:	R.A. 9266	SHEET NO.
	TOURIST SERVICE CENTER AND REST AREA **BRGY. PEÑAPLATA, IGACOS, DAVAO DEL NORTE AND MANOLO FORTICH, BUKIDNON**	PREPARED BY: SHEILA MAE L. LAGAT DRAWN BY: SML DATE:	CHECKED BY: RADY E. ADAME MANAGER PROJECT PLANNING & DESIGN DIVISION	REVIEWED BY: JEOFFREY L. MACALALAD OIC - MANAGER PROJECT EVALUATION & PLANNING DEPARTMENT	GREGORY A. OLLER ASSISTANT CHIEF OPERATING OFFICER ARCHITECTURAL & ENGINEERING SERVICES SECTOR	MARK T. LAPID CHIEF OPERATING OFFICER	DISPLAY RACK DETAILS REVISIONS:	THIS DRAWING AS INSTRUMENT OF SERVICE IS A PROPERTY OF TIEZA. IT SHALL BE UNLAWFUL TO DUPLICATE OR TO MAKE COPIES OF THIS DOCUMENT WITHOUT THE CONCENT OF TIEZA.	A 10 10 16

PEPD.QF.02a

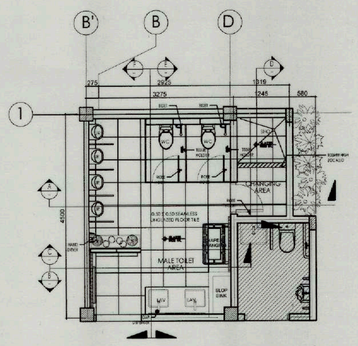

1 A 11 MALE TOILET BLOW-UP PLAN
SCALE 1:75

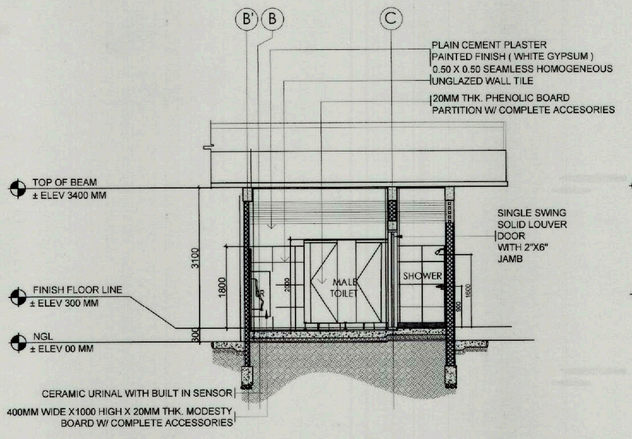

2 A 11 SECTION A
SCALE 1:75

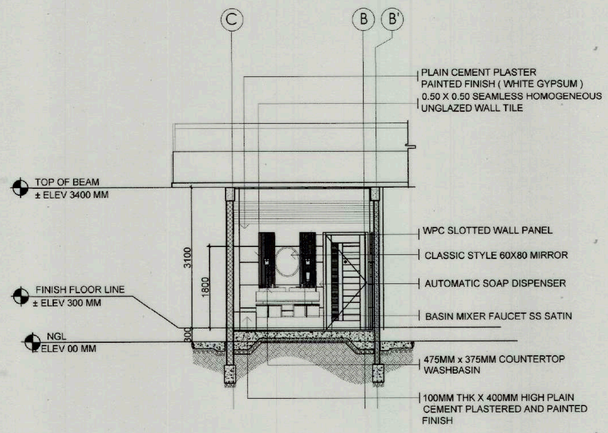

3 A 11 SECTION B
SCALE 1:75

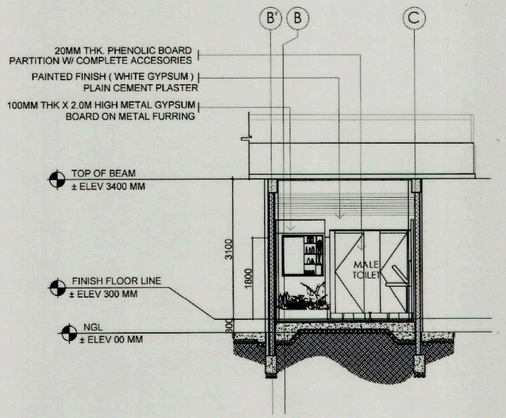

4 A 11 SECTION C
SCALE 1:75

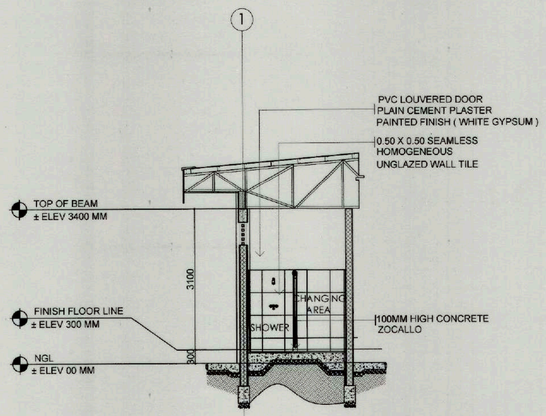

5 A 11 SECTION D
SCALE 1:75

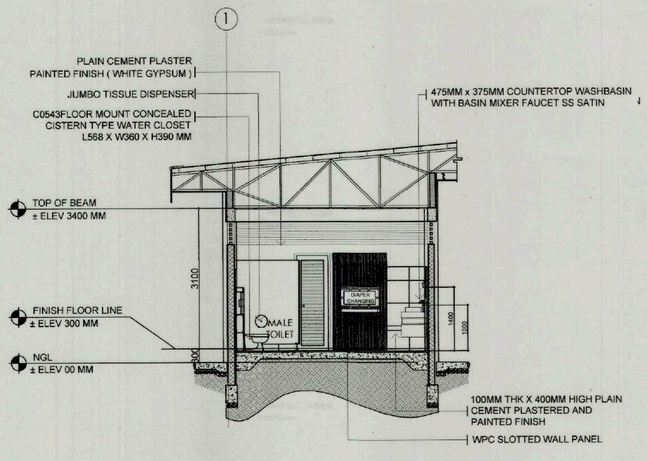

6 A 11 SECTION E
SCALE 1:75

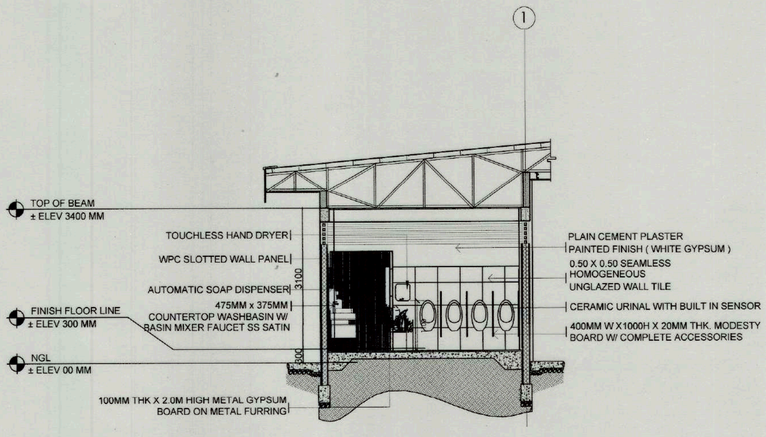

7 A 11 SECTION F
SCALE 1:75

CHROME PLATED
SQUARE FLOOR DRAIN

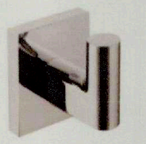

CHROME PLATED
ROBE HOOK

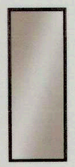

1/4" THK. MIRROR W/ 1/4" THK. PLYWOOD
BACKING ON
2" X 2" ALUMINUM FRAME

STAINLESS STEEL BIDET SPRAY W/ NICKEL
PLATED HOLDER AND 1.2M STAINLESS STEEL
DOUBLE LOCKED HOSE W/ COMPLETE
ACCESSORIES
LOCATION: MALE, FEMALE & PWD TOILET

AC / DC SENSOR FLUSH FOR
WATER CLOSET L160 X H160 MM

FLOOR MOUNT CONCEALED CISTERN
TYPE FRAMELESS WATER CLOSET
L568 X W360 X H390 MM

DIAPER CHANGING PAD

CERAMIC URINAL
WITH BUILT IN SENSOR
FOR URINAL AT FEMALE AREA

CLASSIC STYLE 60X80
OVAL MIRROR

TIEZA TOURISM INFRASTRUCTURE AND ENTERPRISE ZONE AUTHORITY 6th & 7th FLR. TOWER 1 DOUBLE DRAGON PLAZA DOUBLE DRAGON MERIDIAN PARK, MACAPAGAL AVENUE CORNER EDSA EXTENSION BAY AREA PASAY CITY 1308	PROJECT TITLE/ LOCATION: **TOURIST SERVICE CENTER AND REST AREA** **BRGY. PEÑAPLATA, IGACOS, DAVAO DEL NORTE AND MANOLO FORTICH, BUKIDNON**	PROJECT EVALUATION AND PLANNING DEPARTMENT PREPARED BY: MA. MYRNA E. ESTURIS DRAWN BY: MEE DATE:	CHECKED BY: RADY E. ADAME MANAGER PROJECT PLANNING & DESIGN DIVISION	REVIEWED BY: JEOFFREY L. MACALALAD OIC - MANAGER PROJECT EVALUATION & PLANNING DEPARTMENT	RECOMMENDING APPROVAL: GREGORY A. OLLER ASSISTANT CHIEF OPERATING OFFICER ARCHITECTURAL & ENGINEERING SERVICES SECTOR	APPROVED BY: MARK T. LAPID CHIEF OPERATING OFFICER	SHEET CONTENTS: MALE TOILET BLOW-UP PLAN SECTION VIEWS FIXTURES REVISIONS:	R.A. 9266 THIS DRAWING AS INSTRUMENT OF SERVICE IS A PROPERTY OF TIEZA. IT SHALL BE UNLAWFUL TO DUPLICATE OR TO MAKE COPIES OF THIS DOCUMENT WITHOUT THE CONCENT OF TIEZA.	SHEET NO. A 11 11 16

PEPD.QF.02a

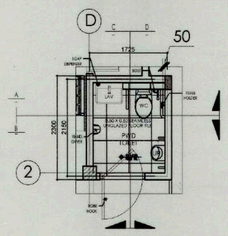

1 / A 12 PWD TOILET BLOWUP PLAN
SCALE 1:75

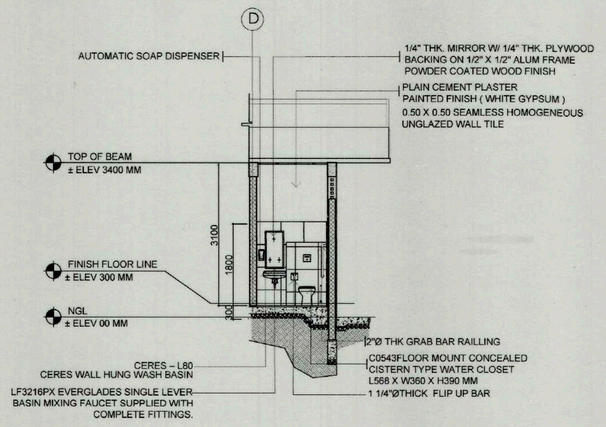

2 / A 12 SECTION A
SCALE 1:75

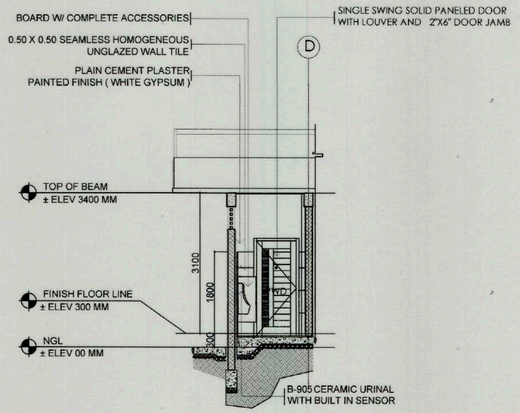

3 / A 12 SECTION B
SCALE 1:75

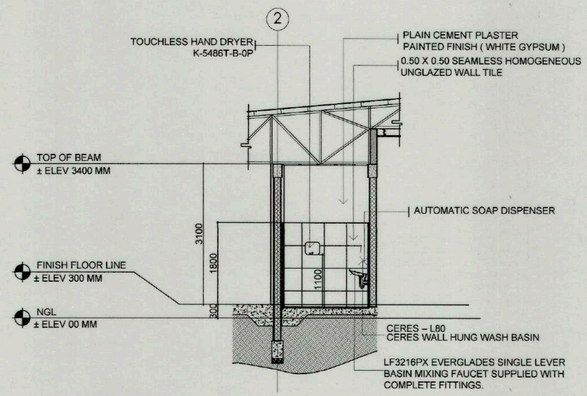

1 / A 12 SECTION C
SCALE 1:75

JUMBO TISSUE HOLDER

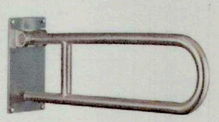
1 1/ 4"ØTHICK FLIP UP BAR

L-TYPE GRAB BAR

SINGLE LEVER BASIN MIXING FAUCET SUPPLIED WITH COMPLETE FITTINGS

WALL HUNG WASH BASIN

JUMBO TISSUE HOLDER

CHROME PLATED SQUARE FLOOR DRAIN

CHROME PLATED ROBE HOOK

1/4" THK. MIRROR W/ 1/4" THK. PLYWOOD BACKING ON 1/4" X 1/4" ALUMINUM FRAME

STAINLESS STEEL BIDET SPRAY W/ NICKEL PLATED HOLDER AND 1.2M STAINLESS STEEL DOUBLE LOCKED HOSE W/ COMPLETE ACCESSORIES
LOCATION: MALE, FEMALE & PWD TOILET

AC/ DC SENSOR FLUSH FOR WATER CLOSET L460 X H460 MM

FLOOR MOUNT CONCEALED CISTERN TYPE WATER CLOSET L568 X W360 X H390 MM FOR PWD

CERAMIC URINAL WITH BUILT IN SENSOR

300X300 HOMOGENEOUS UNGLAZED FLOOR TILE

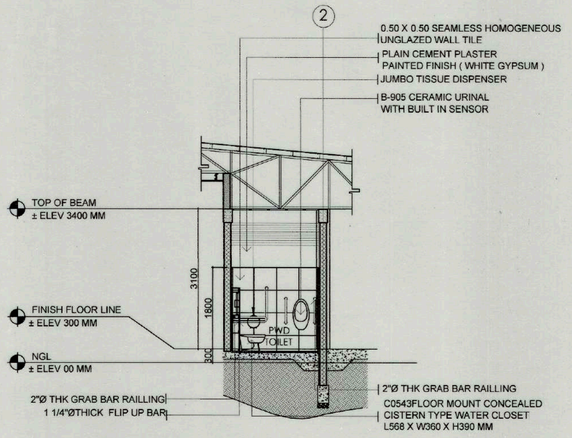

1 / A 12 SECTION D
SCALE 1:75

TIEZA TOURISM INFRASTRUCTURE AND ENTERPRISE ZONE AUTHORITY 6th & 7th FLR. TOWER 1 DOUBLE DRAGON PLAZA DOUBLE DRAGON MERIDIAN PARK, MACAPAGAL AVENUE CORNER EDSA EXTENSION BAY AREA PASAY CITY 1308	PROJECT TITLE/ LOCATION: **TOURIST SERVICE CENTER AND REST AREA** **BRGY. PEÑAPLATA, IGACOS, DAVAO DEL NORTE AND MANOLO FORTICH, BUKIDNON**	PROJECT EVALUATION AND PLANNING DEPARTMENT PREPARED BY: MARK HONRADO DRAWN BY: MH DATE:	CHECKED BY: RADY E. ADAME MANAGER PROJECT PLANNING & DESIGN DIVISION	REVIEWED BY: JEOFFREY L. MACALALAD OIC - MANAGER PROJECT EVALUATION & PLANNING DEPARTMENT	RECOMMENDING APPROVAL: GREGORY A. OLLER ASSISTANT CHIEF OPERATING OFFICER ARCHITECTURAL & ENGINEERING SERVICES SECTOR	APPROVED BY: MARK T. LAPID CHIEF OPERATING OFFICER	SHEET CONTENTS: PWD TOILET BLOW-UP PLAN SECTION VIEWS FIXTURES REVISIONS:	R.A. 9266 THIS DRAWING AS INSTRUMENT OF SERVICE IS A PROPERTY OF TIEZA. IT SHALL BE UNLAWFUL TO DUPLICATE OR TO MAKE COPIES OF THIS DOCUMENT WITHOUT THE CONCENT OF TIEZA.	SHEET NO. A 12 12 16

PEPD.QF.02a

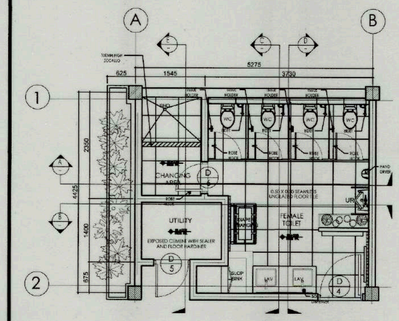

1 FEMALE TOILET BLOW-UP PLAN
A 13 SCALE 1:75

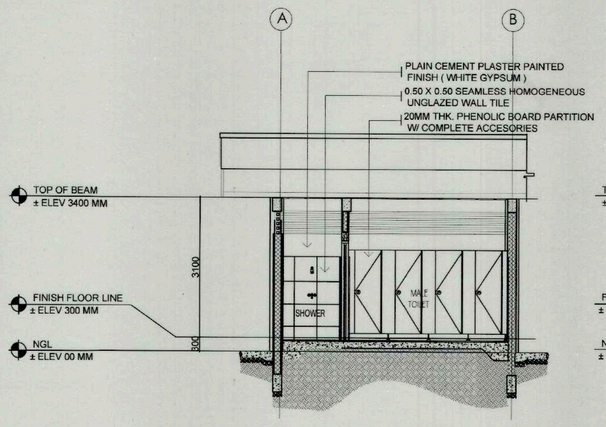

2 SECTION A
A 13 SCALE 1:75

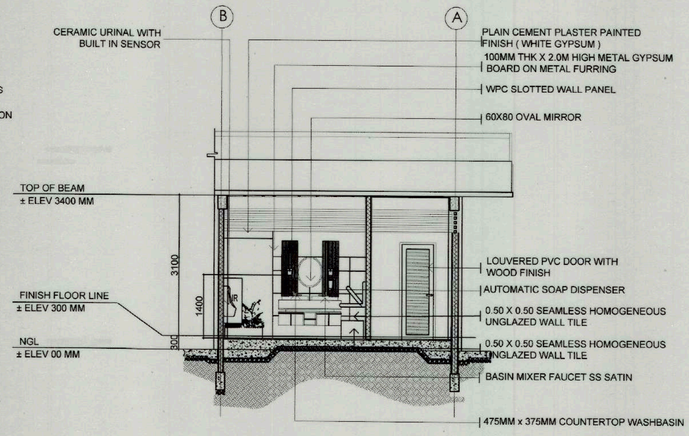

3 SECTION B
A 13 SCALE 1:75

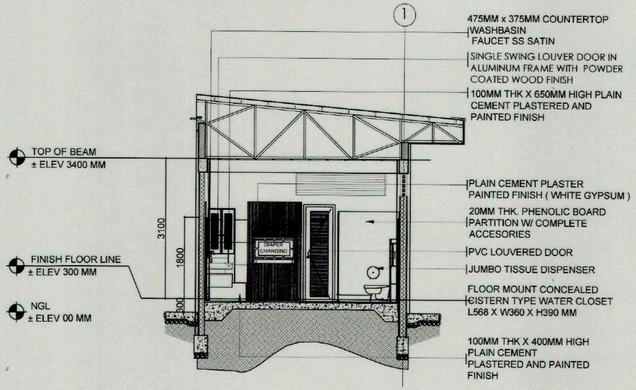

4 SECTION C
A 13 SCALE 1:75

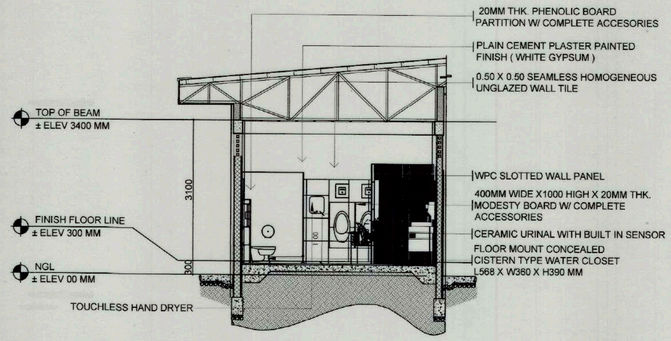

5 SECTION D
A 13 SCALE 1:75

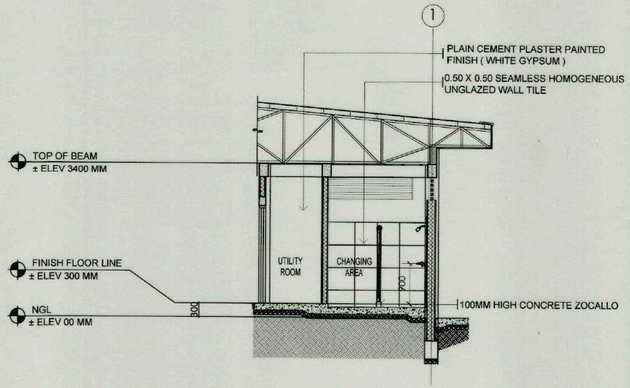

6 SECTION E
A 13 SCALE 1:75

BASIN MIXER FAUCET SS SATIN
FOR MALE & FEMALE TOILET

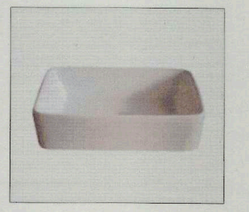

475MM x 375MM COUNTERTOP WASHBASIN
FOR MALE & FEMALE TOILET

JUMBO TISSUE HOLDER

CHROME PLATED
SQUARE FLOOR DRAIN

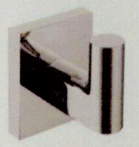

CHROME PLATED
ROBE HOOK

STAINLESS STEEL BIDET SPRAY W/ NICKEL PLATED HOLDER AND 1.2M STAINLESS STEEL DOUBLE LOCKED HOSE W/ COMPLETE ACCESSORIES
LOCATION: MALE, FEMALE & PWD TOILET

AC / DC SENSOR FLUSH FOR
WATER CLOSET L160 X H160 MM

FLOOR MOUNT CONCEALED CISTERN
TYPE WATER CLOSET L568 X W360 X H390 MM

DIAPER CHANGING PAD
CERAMIC URINAL

WITH BUILT IN SENSOR
FOR URINAL AT FEMALE AREA

CLASSIC STYLE 60X80
OVAL MIRROR

TIEZA
TOURISM INFRASTRUCTURE AND ENTERPRISE ZONE AUTHORITY
6th & 7th FLR. TOWER 1 DOUBLE DRAGON PLAZA
DOUBLE DRAGON MERIDIAN PARK, MACAPAGAL AVENUE
CORNER EDSA EXTENSION BAY AREA PASAY CITY 1308

PROJECT TITLE/ LOCATION:
TOURIST SERVICE CENTER AND REST AREA
BRGY. PEÑAPLATA, IGACOS, DAVAO DEL NORTE AND MANOLO FORTICH, BUKIDNON

PROJECT EVALUATION AND PLANNING DEPARTMENT

PREPARED BY:	CHECKED BY:	REVIEWED BY:	RECOMMENDING APPROVAL:	APPROVED BY:
PRINCESSREE N. MALABAY	RADY E. ADAME	JEOFFREY L. MACALALAD	GREGORY A. OLLER	MARK T. LAPID
DRAWN BY: PNM	MANAGER, PROJECT PLANNING & DESIGN DIVISION	OIC - MANAGER, PROJECT EVALUATION & PLANNING DEPARTMENT	ASSISTANT CHIEF OPERATING OFFICER, ARCHITECTURAL & ENGINEERING SERVICES SECTOR	CHIEF OPERATING OFFICER
DATE:				

SHEET CONTENTS:
FEMALE TOILET BLOW-UP PLAN
SECTION VIEWS
FIXTURES

REVISIONS:

R.A. 9266

THIS DRAWING AS INSTRUMENT OF SERVICE IS A PROPERTY OF TIEZA. IT SHALL BE UNLAWFUL TO DUPLICATE OR TO MAKE COPIES OF THIS DOCUMENT WITHOUT THE CONCENT OF TIEZA.

SHEET NO.
A 13
13 16

PEPD.QF.02a

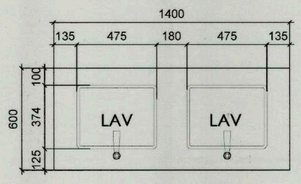

1 / A 14 TOP VIEW
SCALE 1:20

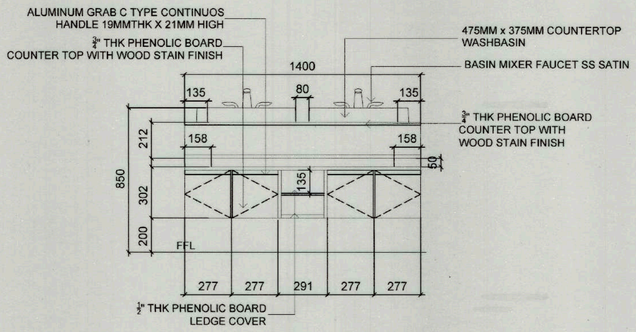

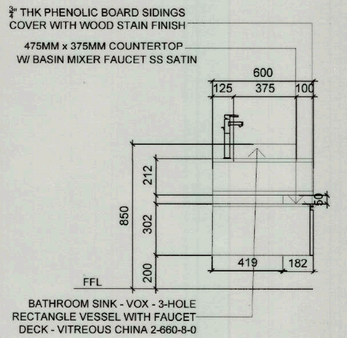

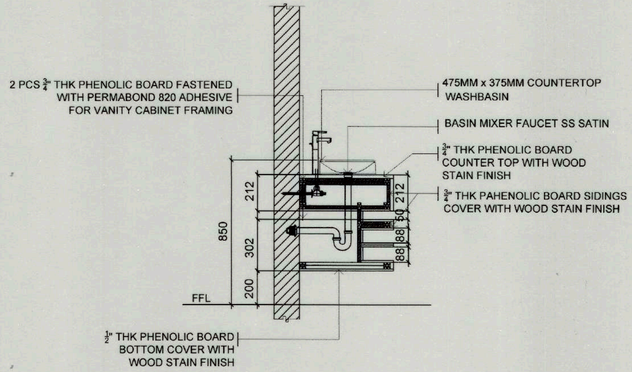

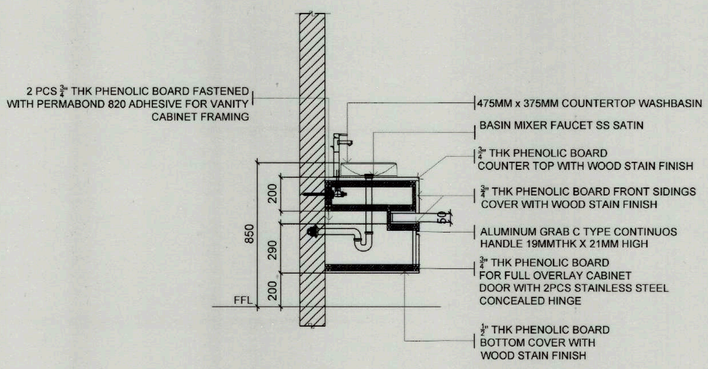

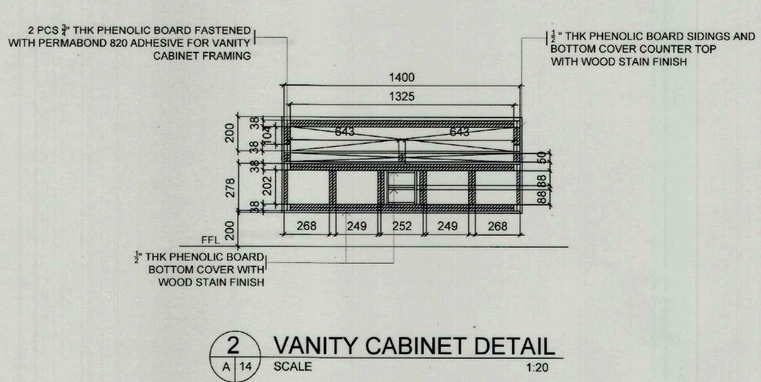

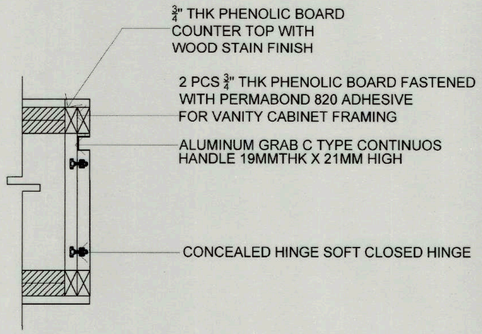

2 / A 14 VANITY CABINET DETAIL
SCALE 1:20

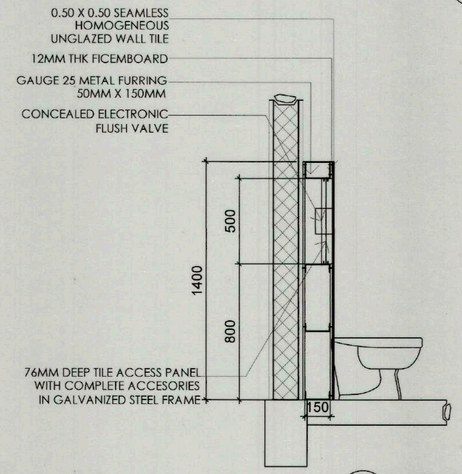

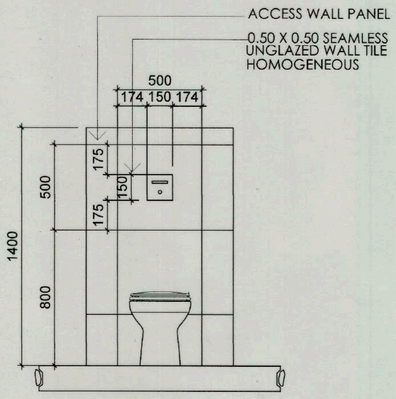

3 / A 14 WC SENSOR CONNECTION DETAIL
SCALE 1:20

TIEZA TOURISM INFRASTRUCTURE AND ENTERPRISE ZONE AUTHORITY 6th & 7th FLR. TOWER 1 DOUBLE DRAGON PLAZA DOUBLE DRAGON MERIDIAN PARK, MACAPAGAL AVENUE CORNER EDSA EXTENSION BAY AREA PASAY CITY 1308	PROJECT TITLE/ LOCATION:	PROJECT EVALUATION AND PLANNING DEPARTMENT			RECOMMENDING APPROVAL:	APPROVED BY:	SHEET CONTENTS:	R.A. 9266	SHEET NO.
	TOURIST SERVICE CENTER AND REST AREA BRGY. PEÑAPLATA, IGACOS, DAVAO DEL NORTE AND MANOLO FORTICH, BUKIDNON	PREPARED BY: MARIA MYRNA ISTURIS DRAWN BY: MMI DATE:	CHECKED BY: RADY E. ADAME MANAGER PROJECT PLANNING & DESIGN DIVISION	REVIEWED BY: JEOFFREY L. MACALALAD OIC - MANAGER PROJECT EVALUATION & PLANNING DEPARTMENT	GREGORY A. OLLER ASSISTANT CHIEF OPERATING OFFICER ARCHITECTURAL & ENGINEERING SERVICES SECTOR	MARK T. LAPID CHIEF OPERATING OFFICER	LAVATORY DETAILS VANITY CABINET DETAIL WC SENSOR CONN. DETAIL REVISIONS:	THIS DRAWING AS INSTRUMENT OF SERVICE IS A PROPERTY OF TIEZA. IT SHALL BE UNLAWFUL TO DUPLICATE OR TO MAKE COPIES OF THIS DOCUMENT WITHOUT THE CONCENT OF TIEZA.	A 14 14 16

PEPD.QF.02a

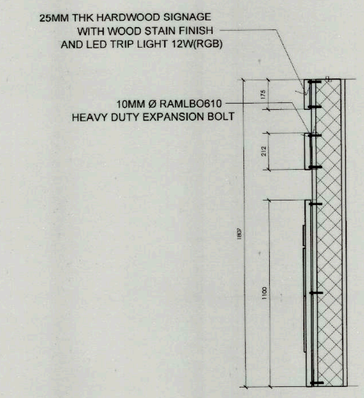

1 / A 15 SIGNAGE CONNECTION DETAIL
SCALE 1:20

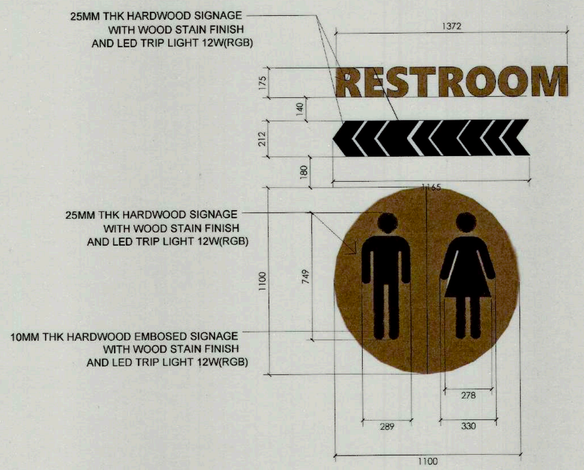

2 / A 15 RESTROOM SIGNAGE
SCALE 1:20

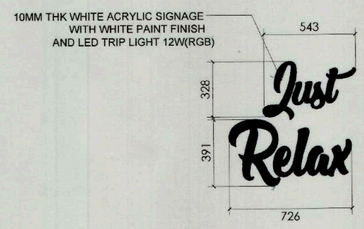

6 / A 15 SIGNAGE
SCALE 1:20

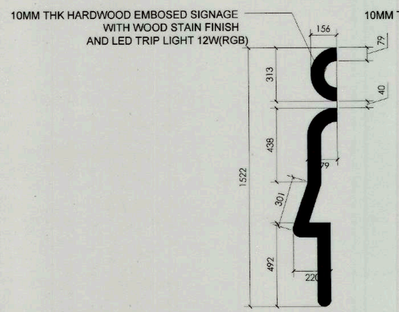

3 / A 15 FEMALE SIGNAGE
SCALE 1:20

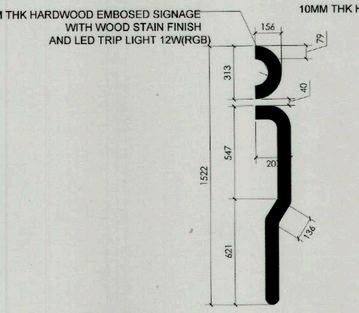

4 / A 15 MALE SIGNAGE
SCALE 1:20

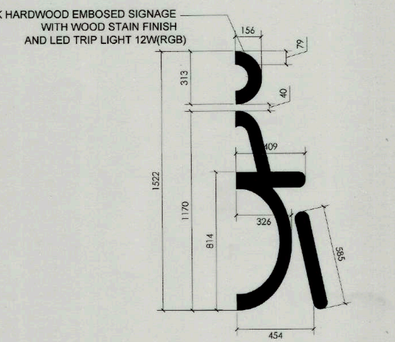

5 / A 15 PWD SIGNAGE
SCALE 1:20

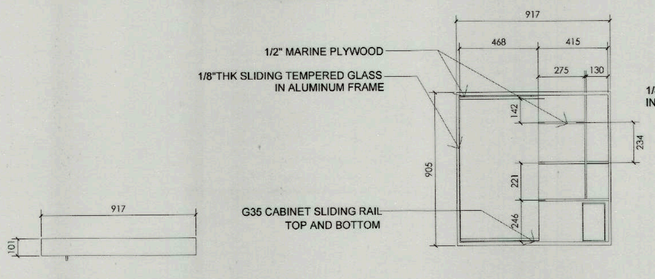

7 / A 15 TOP (WALL CABINET)
SCALE 1:20

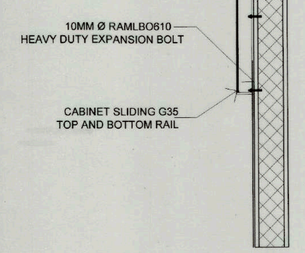

8 / A 15 FRONT (WALL CABINET)
SCALE 1:20

9 / A 15 SIDE (WALL CABINET)
SCALE 1:20

APPLICATION	Walls only, 6mm or 10mm deep tile
PROFILE	Standard Profile 76mm deep (this panel can also be manufactured with a frame depth of 21mm – Budget Lock only)
PANEL FRAME	Precision manufactured from 1mm galvanised steel
PANEL DOOR	9mm CFC with a 0.40mm galvanized backing sheet
LOCKS	Touch Lock only (Touch Lock cannot exceed 600)
SAFETY FEATURES	Identification, safety chains and safety labels attached to the inside of the door
STANDARD SIZES	There are no standard sizes in this panel. All Tile Panels are made to order.

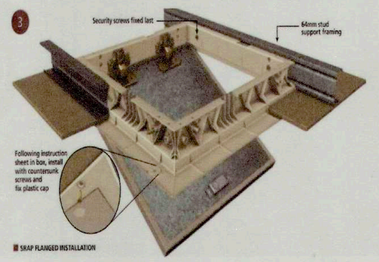

10 / A 15 WALL CABINET DETAIL
SCALE 1:20

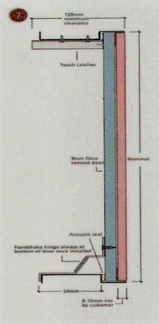

TIEZA TOURISM INFRASTRUCTURE AND ENTERPRISE ZONE AUTHORITY 6th & 7th FLR. TOWER 1 DOUBLE DRAGON PLAZA DOUBLE DRAGON MERIDIAN PARK, MACAPAGAL AVENUE CORNER EDSA EXTENSION BAY AREA PASAY CITY 1308	PROJECT TITLE/ LOCATION: **TOURIST SERVICE CENTER AND REST AREA** **BRGY. PEÑAPLATA, IGACOS, DAVAO DEL NORTE AND MANOLO FORTICH, BUKIDNON**	PROJECT EVALUATION AND PLANNING DEPARTMENT PREPARED BY: MARIA MYRNA ISTURIS DRAWN BY: MMI DATE:	CHECKED BY: RADY E. ADAME MANAGER PROJECT PLANNING & DESIGN DIVISION	REVIEWED BY: JEOFFREY L. MACALALAD OIC - MANAGER PROJECT EVALUATION & PLANNING DEPARTMENT	RECOMMENDING APPROVAL: GREGORY A. OLLER ASSISTANT CHIEF OPERATING OFFICER ARCHITECTURAL & ENGINEERING SERVICES SECTOR	APPROVED BY: MARK T. LAPID CHIEF OPERATING OFFICER	SHEET CONTENTS: SIGNAGE CONN. DETAIL RESTROOM SIGNAGE FEMALE/MALE/PWD SIGNAGE WALL CABINET DETAILS REVISIONS:	R.A. 9266 THIS DRAWING AS INSTRUMENT OF SERVICE IS A PROPERTY OF TIEZA. IT SHALL BE UNLAWFUL TO DUPLICATE OR TO MAKE COPIES OF THIS DOCUMENT WITHOUT THE CONCENT OF TIEZA.	SHEET NO. A 15 15 16

PEPD.QF.02a

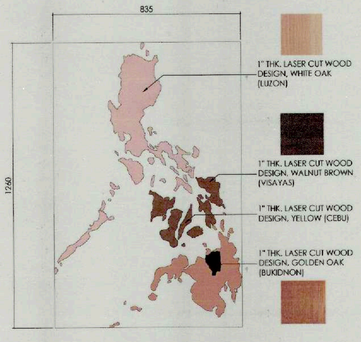

1 A 16 PHILIPPINE MAP SIGNAGE
SCALE 1:15

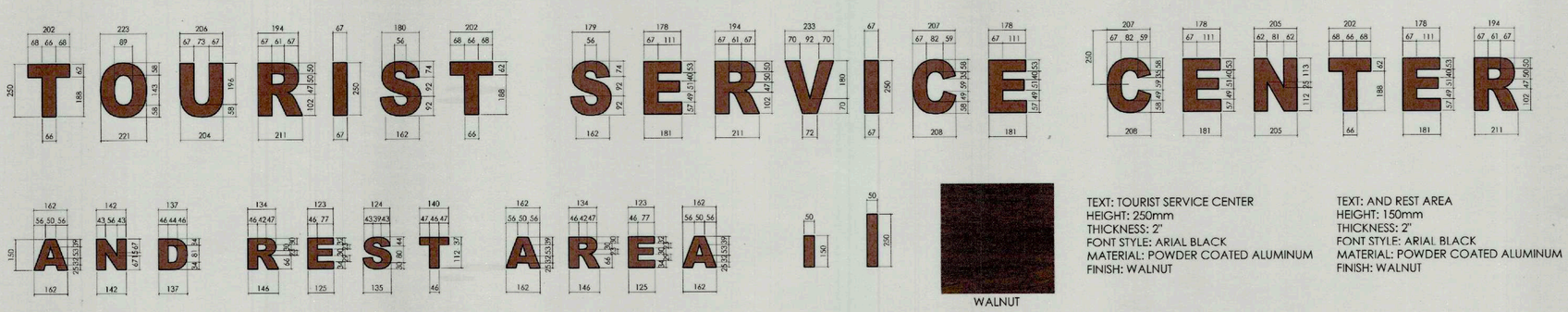

TEXT: TOURIST SERVICE CENTER
HEIGHT: 250mm
THICKNESS: 2"
FONT STYLE: ARIAL BLACK
MATERIAL: POWDER COATED ALUMINUM
FINISH: WALNUT

TEXT: AND REST AREA
HEIGHT: 150mm
THICKNESS: 2"
FONT STYLE: ARIAL BLACK
MATERIAL: POWDER COATED ALUMINUM
FINISH: WALNUT

2 A 16 FACADE SIGNAGE
SCALE 1:15

3 A 16 PERSPECTIVE
SCALE NTS

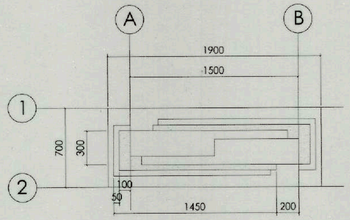

4 A 16 P L A N
SCALE 1:30

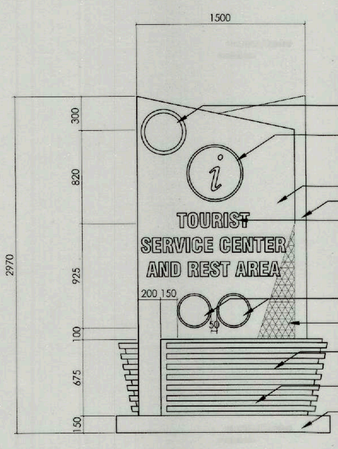

5 A 16 FRONT ELAVATION
SCALE 1:30

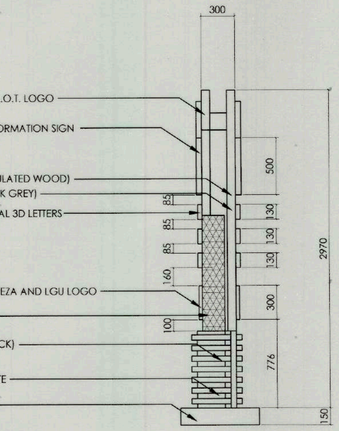

6 A 16 LEFT SIDE ELAVATION
SCALE 1:30

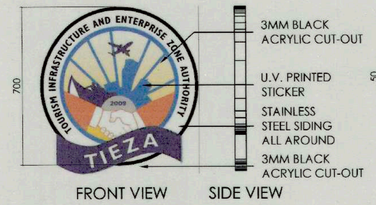

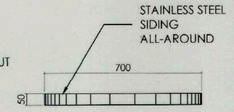

TOURISM INFRASTRUCTURE AND ENTERPRISE ZONE AUTHORITY (T.I.E.Z.A.)

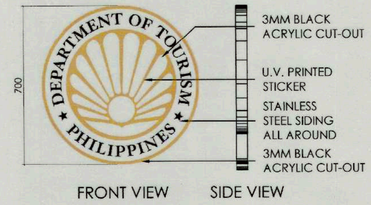

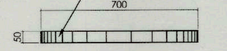

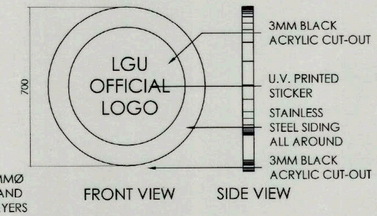

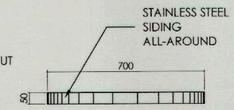

LGU OFFICIAL LOGO

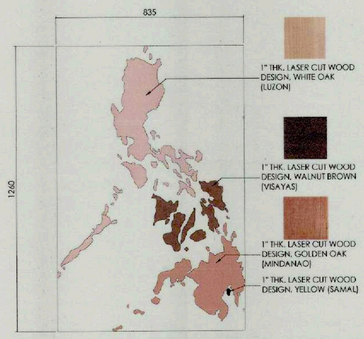

1 A 16 PHILIPPINE MAP SIGNAGE
SCALE 1:15

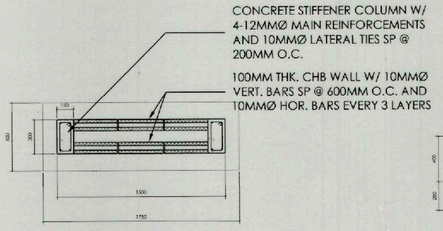

7 A 16 FOOTING PLAN
SCALE 1:30

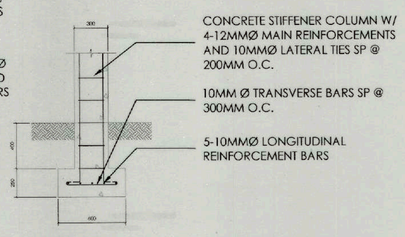

8 A 16 TYP. REINF.DETAIL "A"
SCALE 1:30

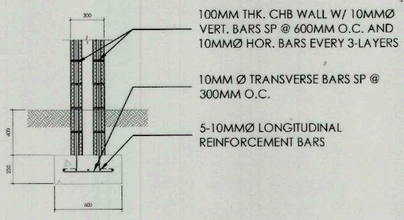

9 A 16 TYP. REINF.DETAIL "B"
SCALE 1:30

SAMAL ISLAND MANOLO FORTICH

10 A 16 SIGNAGE DETAILS
SCALE 1:15

TIEZA TOURISM INFRASTRUCTURE AND ENTERPRISE ZONE AUTHORITY 6th & 7th FLR. TOWER 1 DOUBLE DRAGON PLAZA DOUBLE DRAGON MERIDIAN PARK, MACAPAGAL AVENUE CORNER EDSA EXTENSION BAY AREA PASAY CITY 1308	PROJECT TITLE/ LOCATION: **TOURIST SERVICE CENTER AND REST AREA** BRGY. PEÑAPLATA, IGACOS, DAVAO DEL NORTE AND MANOLO FORTICH, BUKIDNON	PROJECT EVALUATION AND PLANNING DEPARTMENT PREPARED BY: MARIEL T. GUILAS DRAWN BY: MTG DATE:	CHECKED BY: RADY E. ADAME MANAGER PROJECT PLANNING & DESIGN DIVISION	REVIEWED BY: JEOFFREY L. MACALALAD OIC - MANAGER PROJECT EVALUATION & PLANNING DEPARTMENT	RECOMMENDING APPROVAL: GREGORY A. OLLER ASSISTANT CHIEF OPERATING OFFICER ARCHITECTURAL & ENGINEERING SERVICES SECTOR	APPROVED BY: MARK T. LAPID CHIEF OPERATING OFFICER	SHEET CONTENTS: FACADE SIGNAGE DETAILS STAND ALONG SIGNAGE DETAILS SIGNAGE DETAILS REVISIONS:	R.A. 9266 THIS DRAWING AS INSTRUMENT OF SERVICE IS A PROPERTY OF TIEZA. IT SHALL BE UNLAWFUL TO DUPLICATE OR TO MAKE COPIES OF THIS DOCUMENT WITHOUT THE CONCENT OF TIEZA.	SHEET NO. A 16 16 16

PEPD.QF.02a

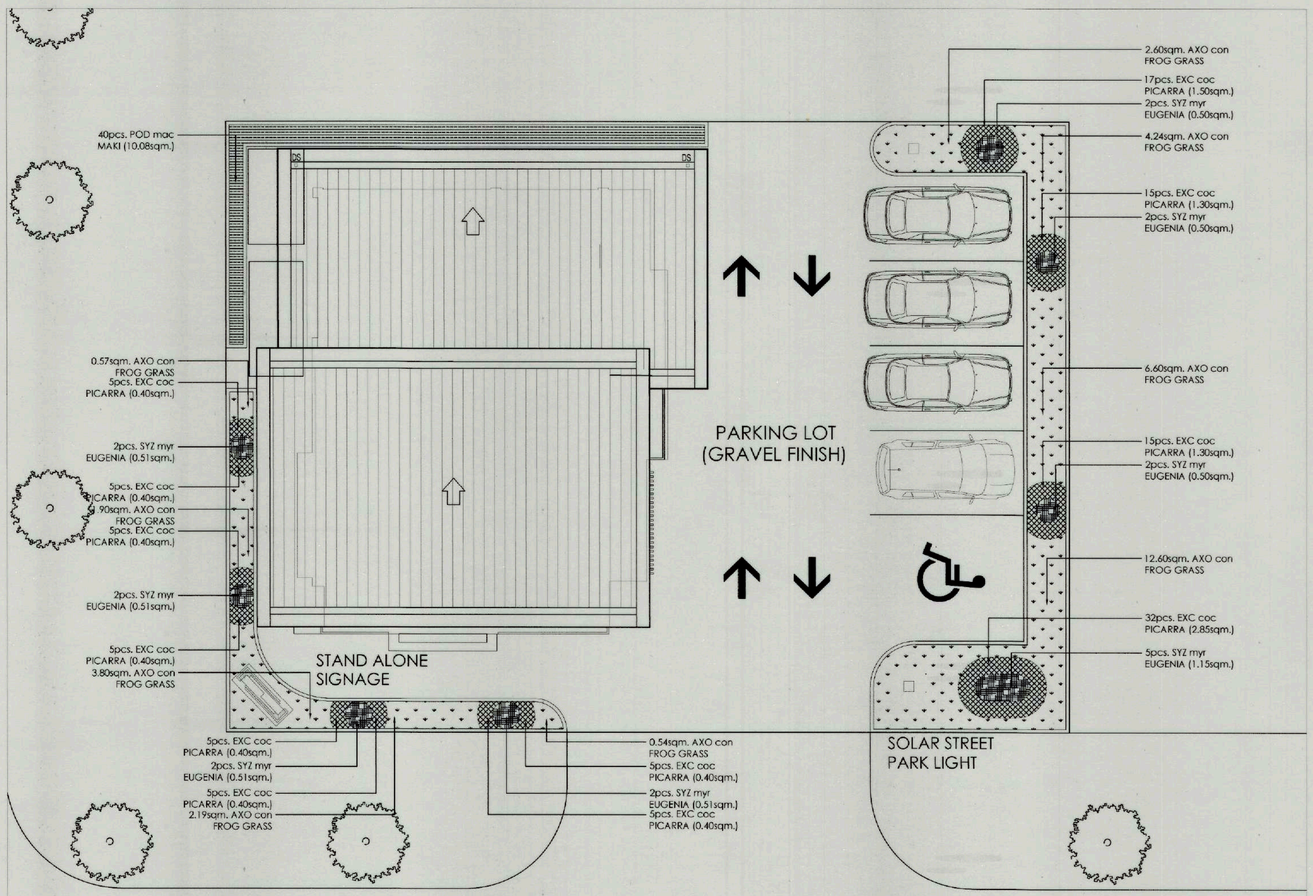

LEGEND:

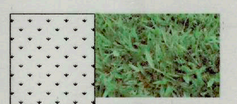

AXO com
Axonopus compressus
FROG GRASS
SODDED

SYZ myr
Syzigium myrtifolium
EUGENIA
800MM HEIGHT X 500MM WIDTH,
SPACED @ 500MM O.C.

EXC coc
Excoecaria cochinchinensis
PICARRA
300MM HEIGHT X 300MM WIDTH,
SPACED @ 300MM O.C.

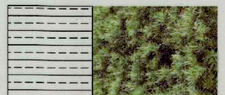

POD mac
Podocarpus macrophyllus
MAKI
800MM HEIGHT X 500MM WIDTH,
SPACED @ 500MM O.C.

1 L 2 LANDSCAPE PLAN
SCALE 1:100

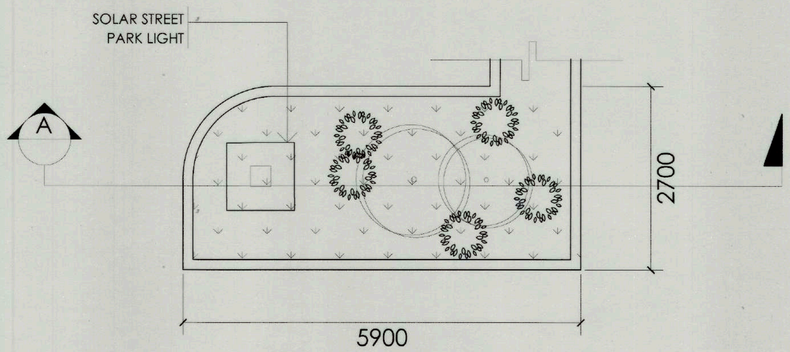

2 L 2 PLANTBOX PLAN
SCALE 1:150

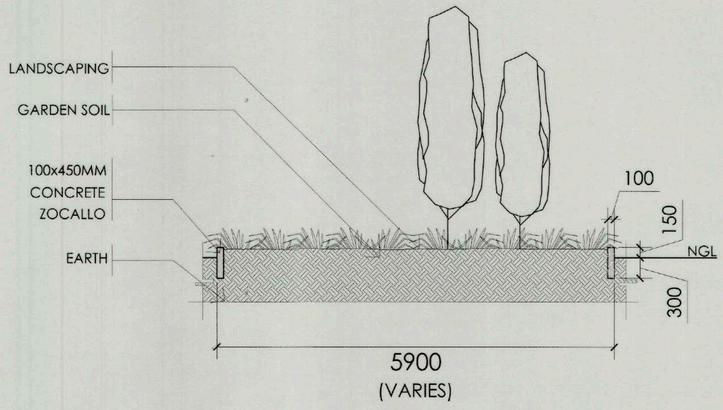

3 L 2 TYPICAL PLANTBOX DETAIL
SCALE 1:150

TIEZA
TOURISM INFRASTRUCTURE
AND ENTERPRISE ZONE AUTHORITY
6th & 7th FLR. TOWER 1 DOUBLE DRAGON PLAZA
DOUBLE DRAGON MERIDIAN PARK, MACAPAGAL AVENUE
CORNER EDSA EXTENSION BAY AREA PASAY CITY 1308

PROJECT TITLE/ LOCATION:
TOURIST SERVICE CENTER AND REST AREA
BRGY. PEÑAPLATA, IGACOS, DAVAO DEL NORTE AND MANOLO FORTICH, BUKIDNON

PROJECT EVALUATION AND PLANNING DEPARTMENT

PREPARED BY:	CHECKED BY:	REVIEWED BY:	RECOMMENDING APPROVAL:	APPROVED BY:
MARK TIREL P. RESOSO	RADY E. ADAME	JEOFFREY L. MACALALAD	GREGORY A. OLLER	MARK T. LAPID
DRAWN BY: MPR	MANAGER, PROJECT PLANNING & DESIGN DIVISION	OIC - MANAGER, PROJECT EVALUATION & PLANNING DEPARTMENT	ASSISTANT CHIEF OPERATING OFFICER, ARCHITECTURAL & ENGINEERING SERVICES SECTOR	CHIEF OPERATING OFFICER
DATE:				

SHEET CONTENTS: LANDSCAPE PLAN, PLANTBOX PLAN, TYP. PLANTBOX DETAIL
REVISIONS:

R.A. 9266: THIS DRAWING AS INSTRUMENT OF SERVICE IS A PROPERTY OF TIEZA. IT SHALL BE UNLAWFUL TO DUPLICATE OR TO MAKE COPIES OF THIS DOCUMENT WITHOUT THE CONCENT OF TIEZA.

SHEET NO. LA 1 / 1 2

PEPD.QF.02a

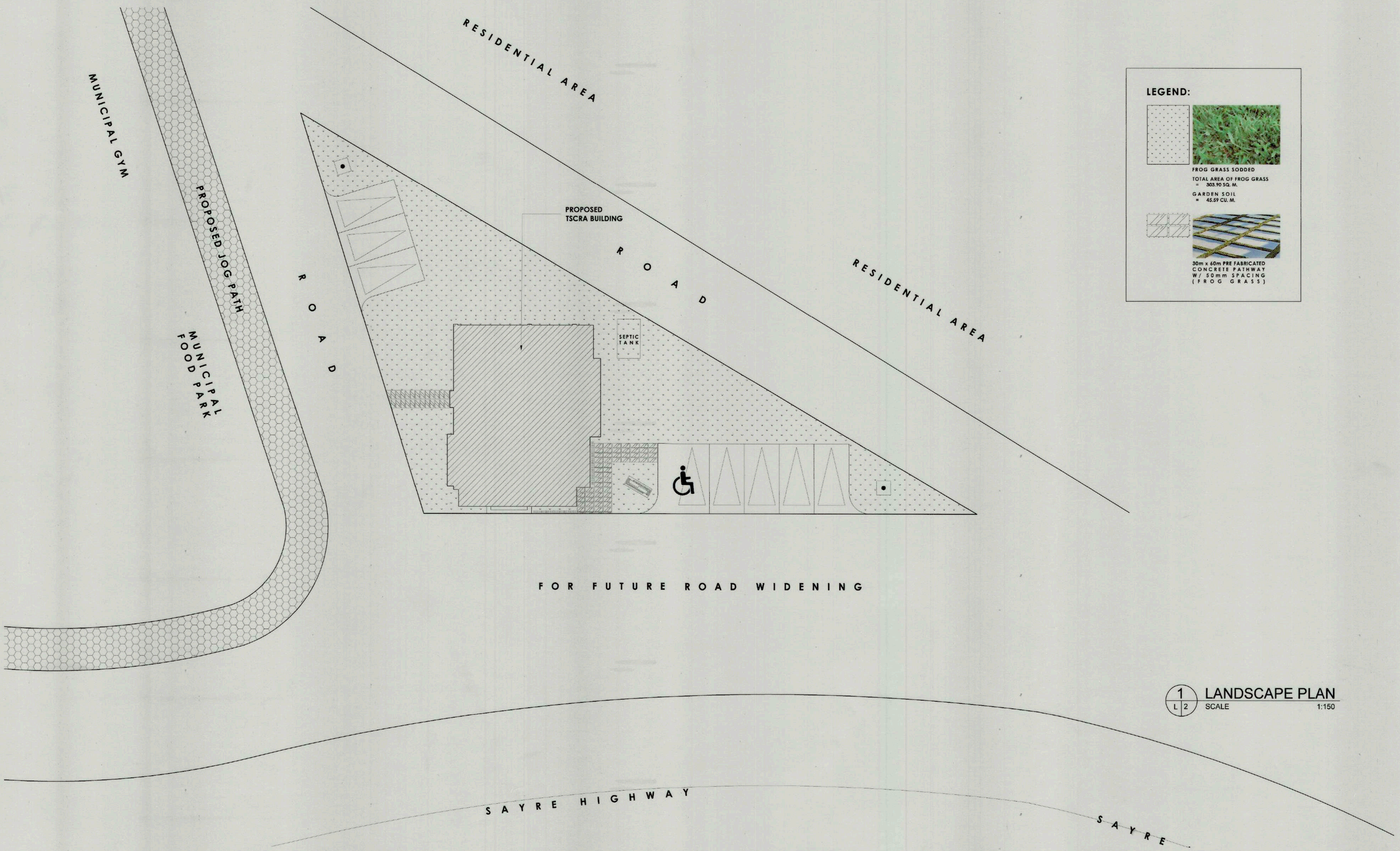

1 / L2 LANDSCAPE PLAN
SCALE 1:150

TIEZA
TOURISM INFRASTRUCTURE AND ENTERPRISE ZONE AUTHORITY
6th & 7th FLR. TOWER 1 DOUBLE DRAGON PLAZA
DOUBLE DRAGON MERIDIAN PARK, MACAPAGAL AVENUE
CORNER EDSA EXTENSION BAY AREA PASAY CITY 1308

PROJECT TITLE/ LOCATION:	PROJECT EVALUATION AND PLANNING DEPARTMENT			RECOMMENDING APPROVAL:	APPROVED BY:	SHEET CONTENTS:	R.A. 9266	SHEET NO.
TOURIST SERVICE CENTER AND REST AREA MANOLO FORTICH, BUKIDNON	PREPARED BY: MARIA FEREL P. RESOSO DRAWN BY: MFPR DATE:	CHECKED BY: RADY E. ADAME MANAGER PROJECT PLANNING & DESIGN DIVISION	REVIEWED BY: JEOFFREY L. MACALALAD OIC - MANAGER PROJECT EVALUATION & PLANNING DEPARTMENT	GREGORY A. OLLER ASSISTANT CHIEF OPERATING OFFICER ARCHITECTURAL & ENGINEERING SERVICES SECTOR	MARK T. LAPID CHIEF OPERATING OFFICER	LANDSCAPE PLAN COLUMN/FOOTING DETAIL TYP. PERIMETER FENCE ELEVATION DETAIL REVISIONS:	THIS DRAWING AS INSTRUMENT OF SERVICE IS A PROPERTY OF TIEZA. IT SHALL BE UNLAWFUL TO DUPLICATE OR TO MAKE COPIES OF THIS DOCUMENT WITHOUT THE CONCENT OF TIEZA.	LA 2 / 2 2

PEPD.QF.02a

STRUCTURAL NOTES

A. GENERAL

A.1 IN THE INTERPRETATION OF THESE DRAWINGS. INDICATED DIMENSION SHALL GOVERN. DISTANCES OR SIZES SHALL NOT BE SCALED FOR CONSTRUCTION PURPOSES.

A.2 IN CASE OF CONFLICT IN DETAILS OR DIMENSIONS BETWEEN THE ARCHITECTURAL AND STRUCTURAL PLANS, THE CONTRACTOR SHALL RELEASE A REQUEST FOR INFORMATION (RFI) THAT SHALL BE RESPONDED BY BOTH THE ARCHITECT-OF-RECORD AND THE SIGNING STRUCTURAL ENGINEER.

A.3 IN CASES OF CONFLICT BETWEEN THE STRUCTURAL PLANS AND THE GENERAL NOTES AND SPECIFICATIONS, THE CONTRACTOR SHALL RELEASE A REQUEST FOR INFORMATION (RFI) THAT SHALL BE RESPONDED BY THE SIGNING STRUCTURAL ENGINEER.

A.4 ALL STRUCTURAL DETAILS UNLESS OTHERWISE SHOWN IN THE DRAWINGS SHALL FOLLOW CONSTRUCTION NOTE DETAILS.

A.5 THE CONTRACTOR MUST ENSURE AND WILL BE HELD RESPONSIBLE FOR THE OVERALL STABILITY OF THE BUILDING/STRUCTURE/EXCAVATION AT ALL STAGES OF THE WORK.

A.6 ALL STRUCTURAL WORKS SHALL BE CARRIED OUT IN COMPLIANCE WITH THE REQUIREMENTS OF THE NATIONAL STRUCTURAL CODE OF THE PHILIPPINES 2015.

A.7 THE CONTRACTOR SHALL COORDINATE WITH THE ARCHITECT, MECHANICAL, ELECTRICAL, STRUCTURAL ENGINEER PLANS AS TO THE EXACT SIZE AND LOCATION OF OPENINGS THRU FLOOR SLABS, BEAMS AND WALLS.

B. CONCRETE

B.1 UNLESS OTHERWISE INDICATED IN PLANS OR NOTED IN THE SPECIFICATIONS, THE MINIMUM 28-DAYS CYLINDER COMPRESSIVE STRENGTH OF CONCRETE, fc', SHALL BE AS FOLLOWS

B.1.1	FOUNDATION	21 MPa (3000 psi)
B.1.2	COLUMNS	21 MPa (3000 psi)
B.1.3	SUSPENDED SLABS, BEAMS & GIRDERS	21 MPa (3000 psi)
B.1.4	PARAPET WALLS & OTHER STRUCTURAL ELEMENTS	21 MPa (3000 psi)
B.1.5	PARTITIONS, CURTAIN WALLS, BEDDED SLABS, SIDEWALKS, CURB, GUTTER AND OTHER STRUCTURAL ELEMENTS	17 MPa (2500 psi)
B.1.6	LEAN CONCRETE	10 MPa (1500 psi)

B.2 NO DEPOSITING OF CONCRETE SHALL BE ALLOWED WITHOUT THE USE OF VIBRATORS UNLESS AUTHORIZED IN WRITING BY THE DESIGNERS AND ONLY FOR UNUSUAL CONDITIONS WHERE VIBRATIONS IS EXTREMELY DIFFICULT TO ACCOMPLISH.

C. REINFORCING STEEL BARS

C.1 ALL REINFORCING BARS SHALL BE DEFORMED STEEL BARS IN ACCORDANCE WITH ASTM A-615.

C.2 ALL REINFORCING DEFORMED STEEL BARS SHALL HAVE A MINIMUM YIELD STRENGTH OF 276 MPa (40 ksi).

C.3 CONCRETE COVER

C.2.1	CAST AGAINTS AND PERMANENTLY IN CONTACT WITH GROUND	75MM
C.2.2	EXPOSED TO WEATHER OR IN CONTACT WITH GROUND	
B.2.2.1	20MMØ THROUGH 58MMØ BARS	50MM
B.2.2.2	16MMØ AND SMALLER BARS	40MM
C.2.3	NOT EXPOSED TO WEATHER OR IN CONTACT WITH GROUND	
B.2.3.1	SLABS, JOISTS, AND WALLS	
	40MMØ AND 58MMØ BARS	40MM
	36MMØ BARS AND SMALLER	20MM
B.2.3.2	BEAMS, COLUMNS, PEDESTALS AND TENSION TIES	40MM

C.4 REINFORCING BAR SPLICES

C.4.1 FOR BEAMS ALL SPLICES SHALL BE LAPPED OT EXTENDED INTO MINIMUM OF 50D UNLESS SHOWN OTHERWISE. HORIZONTAL SPLICES SHALL BE STAGGERED FOR BEAMS AND GIRDERS.

C.4.2 FOR COLUMNS: ALL SPLICES SHALL BE WELDED OR LAPPED LOCATED NEAR THE MIDHEIGHT LEVEL. NO MORE THAN 50% OF THE TOTAL NUMBER OF MAIN BARS SHALL BE SPLICED AT ANY SAME LEVEL LOCATION.

C.5 BUNDLED REINFORCEMENTS

C.5.1 BUNDLED BARS SHALL BE ENCLOSED WITHIN TRANSVERSE REINFORCEMENT. BUNDLED BARS IN COMPRESSION MEMBERS SHALL BE ENCLOSED BY TRANSVERSE REINFORCEMENT AT LEAST 12MMØ IN SIZE.

C.5.2 BARS LARGER THAN A 36MMØ SHALL NOT BE BUNDLED IN BEAMS.

C.5.3 DEVELOPMENT LENGTH FOR INDIVIDUAL BARS WITHIN A BUNDLE, IN TENSION OR COMPRESSION, SHALL BE THAT OF INDIVIDUAL BAR, INCREASED 20 PERCENT FOR A THREE-BAR BUNDLE, AND 33 PERCENT FOR A FOUR-BAR BUNDLE.

D. STRUCTURAL STEEL

D.1 ALL STRUCTURAL STEEL, BOTH ANGLES AND STEEL PLATES SHALL CONFORM TO ASTM A36 AND SHALL HAVE A MINIMUM YIELD STRENGTH OF 248 MPa (36 ksi).

D.2 WELDING ELECTRODES SHALL BE E70XX SERIES.

D.3 MACHINE AND ANCHOR BOLTS SHALL CONFORM TO ASTM A-325, UNLESS NOTED OTHERWISE ON DRAWINGS.

D.4 STEEL ANCHOR RODS SHALL CONFORM TO ASTM A-36, UNLESS NOTED OTHERWISE ON DRAWINGS.

E. CONCRETE MASONRY UNITS

E.1 ALL MATERIALS AND WORKMANSHIP SHALL BE IN ACCORDANCE WITH THE APPLICABLE STANDARDS AND SPECIFICATIONS OF THE NATIONAL STRUCTURAL CODE OF THE PHILIPPINES.

E.2 THE ACTUAL COMPRESSIVE STRENGTH OF MASONRY (f'm) SHALL NOT BE LESS THAN 4MPa.

E.3 MINIMUM LAP SPLICE SHALL BE 250MM.

E.4 ALL CELLS AND SPACES CONTAINING REINFORCEMENTS SHALL BE FILLED SOLIDLY FILLED WITH MORTAR.

F. FOUNDATION

F.1 THE FOUNDATION SYSTEM OF THE STRUCTURE IS BASED ON THE ASSUMED SOIL BEARING CAPACITY (SBC) OF 100 KPA. NO SOIL INVESTIGATION ARE CONDUCTED PRIOR TO THE FOUNDATION DESIGN. THE CONTRACTOR SHALL CONFIRM THE APPLICABILITY OF THE SPECIFIED FOUNDATION TYPE BASED ON THE ACTUAL SITE CONDITION. THE FOUNDATION SHALL BE REVISED IF NECESSARY AS DICTATED BY ACTUAL SITE CONDITION.

F.2 EXISTING UNDERGROUND PIPES, TUNNELS, ETC., SHALL BE BROUGHT TO THE ATTENTION OF THE STRUCTURAL ENGINEER FOR EVALUATION.

F.3 AN EXCAVATION ADJACENT TO AN EXISTING STRUCTURE SHALL BE PROVIDED WITH ADEQUATE SHEET PILING BY THE CONTRACTOR. THE SHEET PILES SHALL BE PROPERLY DESIGNED TO RESIST EARTH AND WATER PRESSURE AS WELL AS SURCHARGE LOADING ON THE FOOTING OF THE ADJACENT EXISTING STRUCTURE.

F.4 UNLESS OTHERWISE DETAILED IN THE PLANS, CHB WALL FOOTING SHALL BE AS PER FIGURES ON THE GENERAL CONSTRUCTION NOTES OF STRUCTURAL PLAN.

F.5 ALL EARTH FILL SUPPORTING GROUND SLABS FOR FLOORING, PARKING SIDEWALK, ETC., SHALL BE COMPACTED TO 90% PROCTOR IN LAYERS OF 300MM. UNLESS OTHERWISE SPECIFIED BY THE STRUCTURAL ENGINEER.

TYPE OF STANDARD HOOK	BAR SIZE	MIN. INSIDE BEND DIA. (mm)	STRAIGHT EXTENSION[1] Lext (mm)	TYPE OF STANDARD HOOK
90-DEGREE HOOK	10mmØ THROUGH 16mmØ	4db	GREATER OF 6db AND 75mm	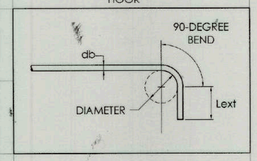
	20mmØ THROUGH 25mmØ	6db	12db	
135-DEGREE HOOK	10mmØ THROUGH 16mmØ	4db	GREATER OF 6db AND 75mm	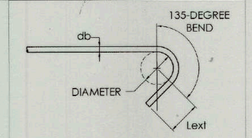
	20mmØ THROUGH 25mmØ	6db		
180-DEGREE HOOK	10mmØ THROUGH 16mmØ	4db	GREATER OF 4db AND 65mm	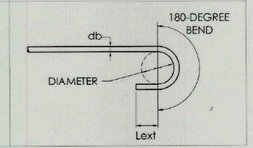
	20mmØ THROUGH 25mmØ	6db		

[1] A STANDARD HOOK FOR STIRRUPS, TIES, AND HOOPS INCLUDES THE SPECIFIC INSIDE BEND DIAMETER AND STRAIGHT EXTENSION LENGTH. IT SHALL BE PERMITTED TO USE A LONGER STRAIGHT EXTENSION AT THE END OF A HOOK. A LONGER EXTENSION SHALL NOT BE CONSIDERED TO INCREASE THE ANCHORAGE CAPACITY OF THE HOOK.

TABLE 2: MINIMUM INSIDE BEND DIAMETERS AND STANDARD HOOK GEOMETRY FOR STIRRUPS, TIES, AND HOOPS

TYPE OF STANDARD HOOK	BAR SIZE	MIN. INSIDE BEND DIA. (mm)	STRAIGHT EXTENSION[1] Lext (mm)	TYPE OF STANDARD HOOK
90-DEGREE HOOK	10mmØ THROUGH 25mmØ	6db	12db	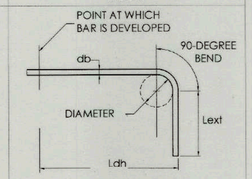
	28mmØ THROUGH 36mmØ	8db		
	40mmØ THROUGH 58mmØ	10db		
180-DEGREE HOOK	10mmØ THROUGH 25mmØ	6db	GREATER OF 4db AND 65mm	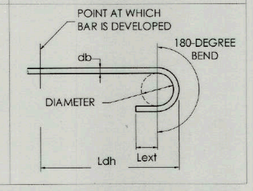
	28mmØ THROUGH 36mmØ	8db		
	40mmØ THROUGH 58mmØ	10db		

[1] A STANDARD HOOK FOR DEFORMED BARS IN TENSION INCLUDES THE SPECIFIC INSIDE BEND DIAMETER AND STRAIGHT EXTENSION LENGTH. IT SHALL BE PERMITTED TO USE A LONGER STRAIGHT EXTENSION AT THE END OF A HOOK. A LONGER EXTENSION SHALL NOT BE CONSIDERED TO INCREASE THE ANCHORAGE CAPACITY OF THE HOOK.

TABLE 3: STANDARD HOOK GEOMETRY FOR DEVELOPMENT OF DEFORMED BARS IN TENSION

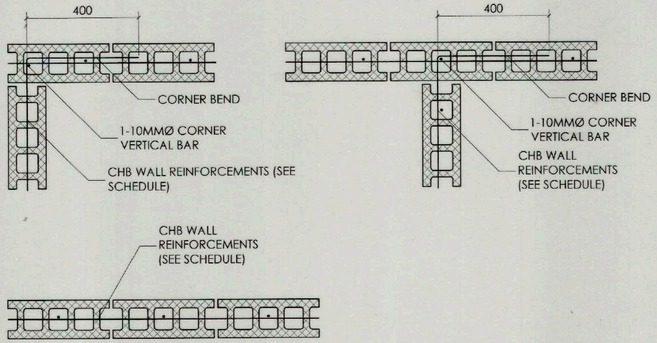

1 / S 01 TYPICAL CHB WALL CONNECTION DETAILS
SCALE NTS

NOTE: FOR fc'=21MPa (3000psi), fy=276MPa (40ksi)

BAR DIAMETER (mm)	MINIMUM DEVELOPMENT AND SPLICE LENGTHS (mm)								
	TENSION							COMPRESSION	
					TOP BARS				
	Ld	HOOK Ldh	CLASS A SPLICE=Ld	CLASS B SPLICE=1.3Ld	Ld	CLASS A SPLICE=Ld	CLASS B SPLICE=1.3Ld	Ldc	SPLICE
10	300	150	300	390	390	390	510	200	300
12	345	175	345	450	450	450	585	200	300
16	460	235	460	600	600	600	780	235	315
20	575	290	575	750	750	750	975	290	395
25	890	365	890	1160	1160	1160	1510	365	490
28	995	405	995	1295	1295	1295	1685	405	550
32	1135	465	1135	1480	1480	1480	1925	465	630
36	1280	525	1280	1665	1665	1665	2165	525	710

TABLE 3: TABLE OF LAP SPLICES AND DEVELOPMENT LENGTHS

THICKNESS (MM)	REINFORCEMENTS		REMARKS
	VERTICAL	HORIZONTAL	
150	10MMØ @ 600MM O.C.	10MMØ @ 600MM O.C.	RUNNING BOND
100	10MMØ @ 600MM O.C.	10MMØ @ 600MM O.C.	RUNNING BOND

2 / S 01 SCHEDULE OF CHB REINFORCEMENTS
SCALE NTS

TIEZA
TOURISM INFRASTRUCTURE AND ENTERPRISE ZONE AUTHORITY
6th & 7th FLR. TOWER 1 DOUBLE DRAGON PLAZA
DOUBLE DRAGON MERIDIAN PARK, MACAPAGAL AVENUE
CORNER EDSA EXTENSION BAY AREA PASAY CITY 1308

PROJECT TITLE/LOCATION:
TOURIST SERVICE CENTER AND REST AREA
BRGY. PEÑAPLATA, IGACOS, DAVAO DEL NORTE AND BRGY. TANKULAN, MANOLO FORTICH, BUKIDNON

PROJECT EVALUATION AND PLANNING DEPARTMENT

PREPARED BY:	CHECKED BY:	REVIEWED BY:	RECOMMENDING APPROVAL:	APPROVED BY:
JOSEPH S. QUIBAN	RADY E. ADAME	JEOFFREY L. MACALALAD	GREGORY A. OLLER	MARK T. LAPID
DRAWN BY: JSQ DATE: SEPTEMBER 5, 2022	MANAGER PROJECT PLANNING & DESIGN DIVISION	OIC - MANAGER PROJECT EVALUATION & PLANNING DEPARTMENT	ASSISTANT CHIEF OPERATING OFFICER, ARCHITECTURAL AND ENGINEERING SERVICES SECTOR	CHIEF OPERATING OFFICER

SHEET CONTENTS: STRUCTURAL NOTES TYP. CHB WALL CONNECTION DETAILS SCHEDULE OF CHB REINFORCEMENTS

REVISIONS:

R.A. 9266

THIS DRAWING AS INSTRUMENT OF SERVICE IS A PROPERTY OF TIEZA. IT SHALL BE UNLAWFUL TO DUPLICATE OR TO MAKE COPIES OF THIS DOCUMENT WITHOUT THE CONCENT OF TIEZA.

SHEET NO. S 01 / 1 5

PEPD.QF.02a

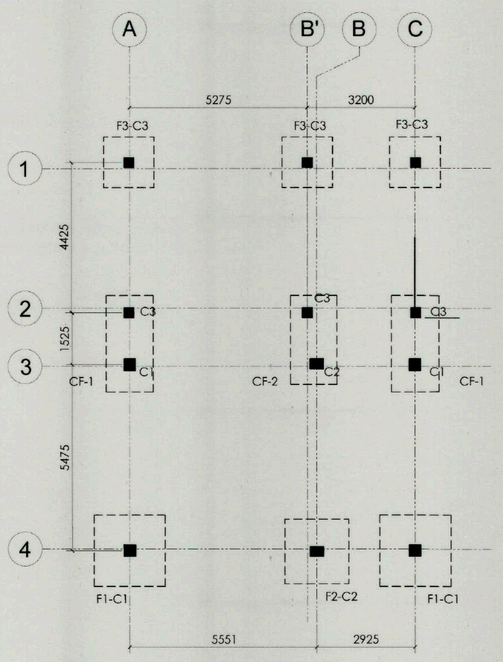

1 S 02 FOUNDATION PLAN
SCALE 1:100

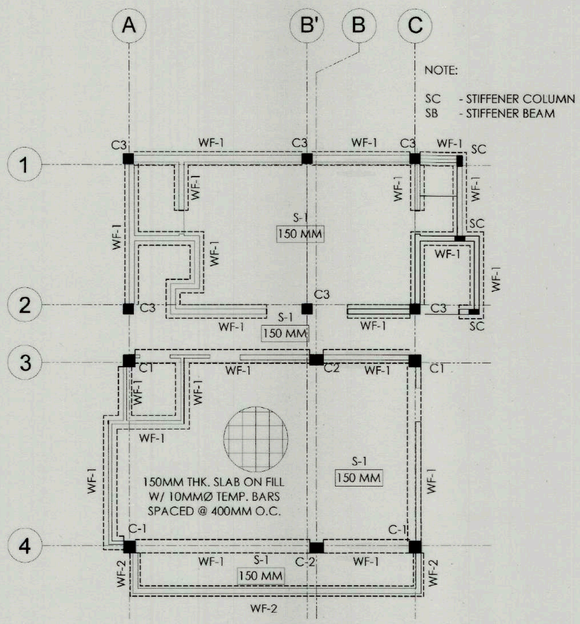

2 S 02 WALL FOOTING LAYOUT
SCALE 1:100

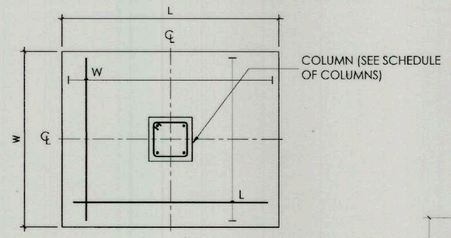

3 S 02 TYPICAL FOOTING PLAN
SCALE 1:20

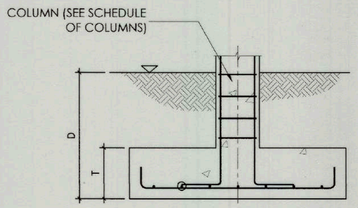

4 S 02 TYPICAL FOOTING DETAIL
SCALE 1:20

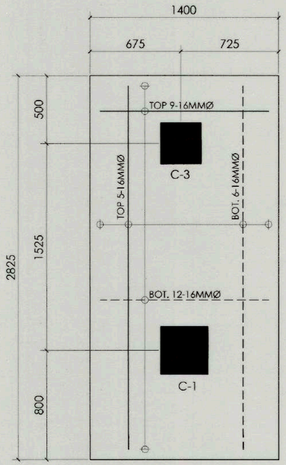

5 S 02 CF-1 PLAN
SCALE 1:25

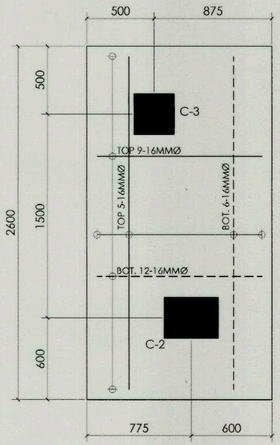

6 S 02 CF-2 PLAN
SCALE 1:25

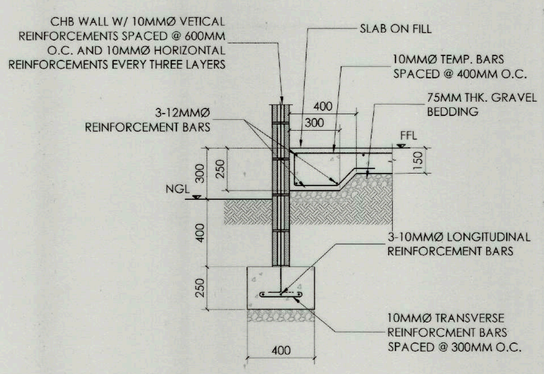

7 S 02 WF-1 DETAIL
SCALE 1:20

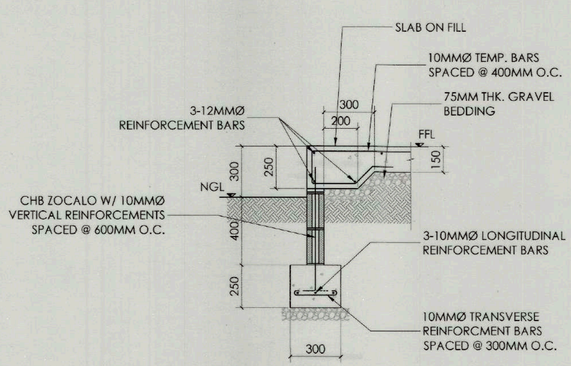

8 S 02 WF-2 DETAIL
SCALE 1:20

FOOTING MARK	DIMENSION (MM)				REINFORCEMENTS				REMARKS
					BOTTOM BARS		TOP BARS		
	LENGTH	WIDTH	DEPTH	THICKNESS	L BARS	W BARS	L BARS	W BARS	
F-1	2100	2100	1500	300	10-16MMØ	10-16MMØ	-	-	ISOLATED FOOTING
F-2	1900	1900	1500	300	9-16MMØ	9-16MMØ	-	-	ISOLATED FOOTING
F-3	1400	1400	1500	300	6-16MMØ	6-16MMØ	-	-	ISOLATED FOOTING
CF-1	1400	2825	1500	300	12-16MMØ	6-16MMØ	9-16MMØ	5-16MMØ	COMBINED FOOTING
CF-2	1375	2600	1500	300	12-16MMØ	6-16MMØ	9-16MMØ	5-16MMØ	COMBINED FOOTING

9 S 02 SCHEDULE OF FOOTING
SCALE NTS

TIEZA
TOURISM INFRASTRUCTURE
AND ENTERPRISE ZONE AUTHORITY
6th & 7th FLR. TOWER 1 DOUBLE DRAGON PLAZA
DOUBLE DRAGON MERIDIAN PARK, MACAPAGAL AVENUE
CORNER EDSA EXTENSION BAY AREA PASAY CITY 1308

PROJECT TITLE/LOCATION:
TOURIST SERVICE
CENTER AND REST AREA
BRGY. PEÑAPLATA, IGACOS, DAVAO DEL NORTE AND
BRGY. TANKULAN, MANOLO FORTICH, BUKIDNON

PROJECT EVALUATION AND PLANNING DEPARTMENT

PREPARED BY:	CHECKED BY:	REVIEWED BY:	RECOMMENDING APPROVAL:	APPROVED BY:
JOSEPH S. QUIBAN	RADY E. ADAME	JEOFFREY L. MACALALAD	GREGORY A. OLLER	MARK T. LAPID
DRAWN BY: JSQ	MANAGER	OIC - MANAGER	ASSISTANT CHIEF OPERATING OFFICER,	CHIEF OPERATING OFFICER
DATE: SEPTEMBER 5, 2022	PROJECT PLANNING & DESIGN DIVISION	PROJECT EVALUATION & PLANNING DEPARTMENT	ARCHITECTURAL AND ENGINEERING SERVICES SECTOR	

SHEET CONTENTS:
FOUNDATION PLAN
WALL FOOTING LAYOUT
TYPICAL FOOTING PLAN
TYPICAL FOOTING DETAILS
CF-1 PLAN
CF-2 PLAN
WF-1 DETAILS
WF-2 DETAILS
SCHEDULE OF FOOTINGS

REVISIONS:

R.A. 9266

THIS DRAWING AS INSTRUMENT OF SERVICE IS A PROPERTY OF TIEZA. IT SHALL BE UNLAWFUL TO DUPLICATE OR TO MAKE COPIES OF THIS DOCUMENT WITHOUT THE CONCENT OF TIEZA.

SHEET NO. S 02 / 2 5

PEPD.QF.02a

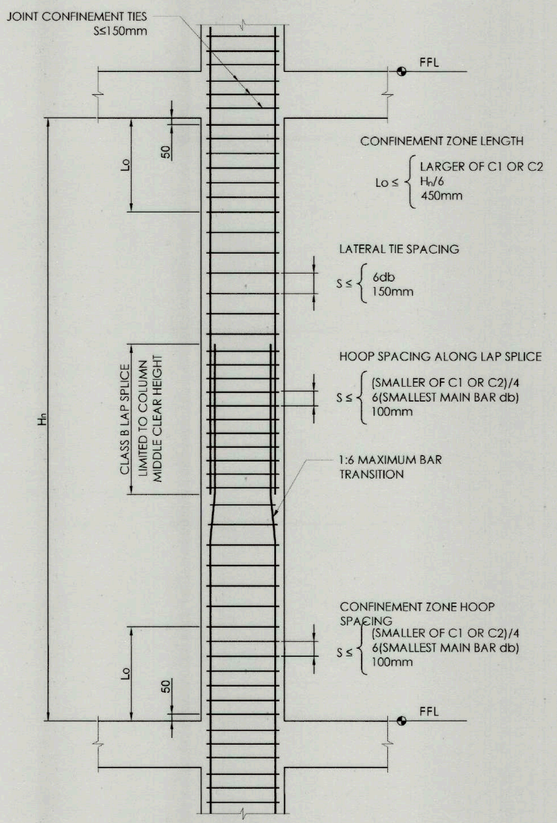

1 S 03 TYPICAL COLUMN DETAILS
SCALE NTS

SCHEDULE OF COLUMNS

LEVEL	MARK	DIMENSION (MM)		SECTION	REINFORCEMENTS			
					MAIN BAR	LATERAL TIES		
		B	H			DIAMETER	SET OF TIES	SPACING
ELEV. 5500 TO ELEV. 3400	C-1	350	350	H B	12-16MMØ	10MMØ	5	1@50, 3@100, REST@150
	C-2	400	300	H B	10-16MMØ	10MMØ	4	1@50, 3@100, REST@150
ELEV. 3400 TO FOUNDATION	C-1	350	350	H B	12-16MMØ	10MMØ	5	1@50, 8@100, REST@150
	C-2	400	300	H B	10-16MMØ	10MMØ	4	1@50, 8@100, REST@150
	C-3	300	300	H B	8-16MMØ	10MMØ	3	1@50, 8@100, REST@150

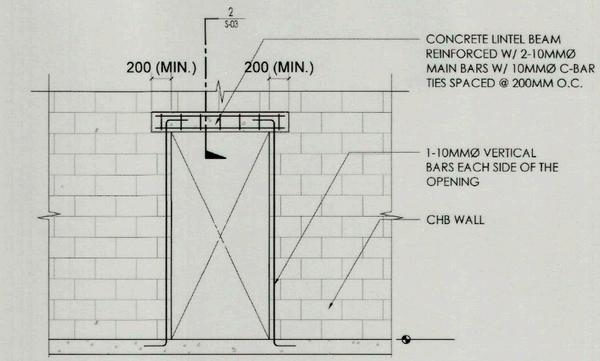

5 S 03 TYPICAL LINTEL BEAM DETAIL
SCALE NTS

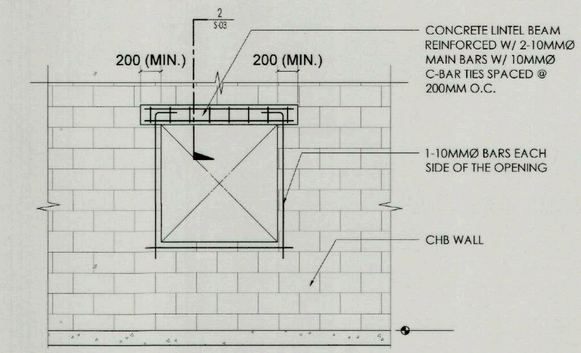

6 S 03 TYPICAL LINTEL BEAM DETAIL
SCALE NTS

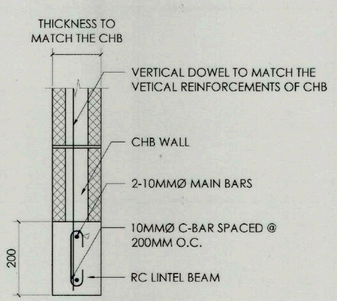

2 S 03 TYPICAL LINTEL BEAM DETAIL
SCALE NTS

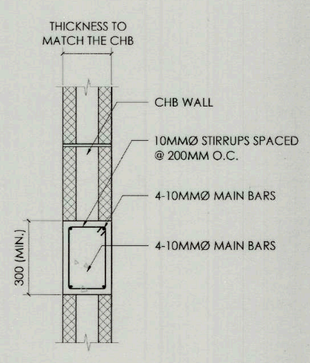

3 S 03 TYP. STIFFENER BEAM DETAIL
SCALE NTS

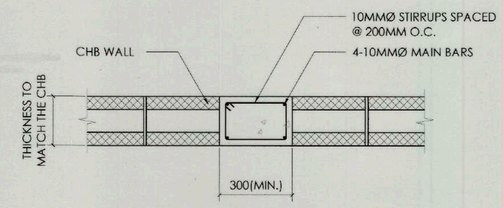

4 S 03 TYP. STIFFENER COLUMN DETAIL
SCALE NTS

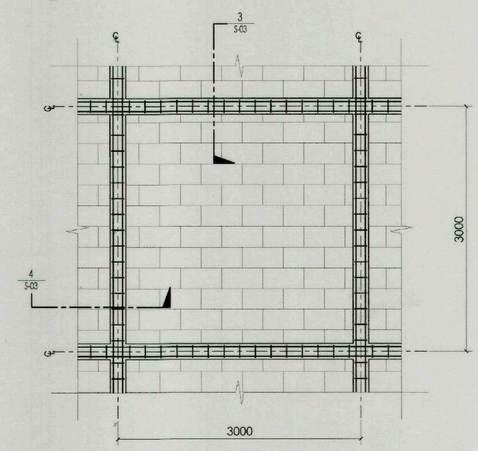

7 S 03 TYP. STIFFENER BEAM & COLUMN ELEV. DETAIL
SCALE NTS

TIEZA
TOURISM INFRASTRUCTURE
AND ENTERPRISE ZONE AUTHORITY
6th & 7th FLR. TOWER 1 DOUBLE DRAGON PLAZA
DOUBLE DRAGON MERIDIAN PARK, MACAPAGAL AVENUE
CORNER EDSA EXTENSION BAY AREA PASAY CITY 1308

PROJECT TITLE/LOCATION:
TOURIST SERVICE
CENTER AND REST AREA
BRGY. PEÑAPLATA, IGACOS, DAVAO DEL NORTE AND
BRGY. TANKULAN, MANOLO FORTICH, BUKIDNON

PROJECT EVALUATION AND PLANNING DEPARTMENT

PREPARED BY:	CHECKED BY:	REVIEWED BY:	RECOMMENDING APPROVAL:	APPROVED BY:
JOSEPH S. QUIBAN	RADY E. ADAME	JEOFFREY L. MACALALAD	GREGORY A. OLLER	MARK T. LAPID
DRAWN BY: JSQ	MANAGER	OIC - MANAGER	ASSISTANT CHIEF OPERATING OFFICER,	CHIEF OPERATING OFFICER
DATE: SEPTEMBER 5, 2022	PROJECT PLANNING & DESIGN DIVISION	PROJECT EVALUATION & PLANNING DEPARTMENT	ARCHITECTURAL AND ENGINEERING SERVICES SECTOR	

SHEET CONTENTS:
TYPICAL COLUMN DETAILS
SCHEDULE OF COLUMNS
TYPICAL LINTEL BEAM DETAILS
TYPICAL STIFFENER BEAM DETAILS
TYPICAL STIFFENER COLUMN DETAILS
TYP. STIFFENER BEAM & COLUMN ELEV.

REVISIONS:

R.A. 9266

THIS DRAWING AS INSTRUMENT OF SERVICE IS A PROPERTY OF TIEZA. IT SHALL BE UNLAWFUL TO DUPLICATE OR TO MAKE COPIES OF THIS DOCUMENT WITHOUT THE CONCENT OF TIEZA.

SHEET NO. S 03 / 3 5

PEPD.QF.02a

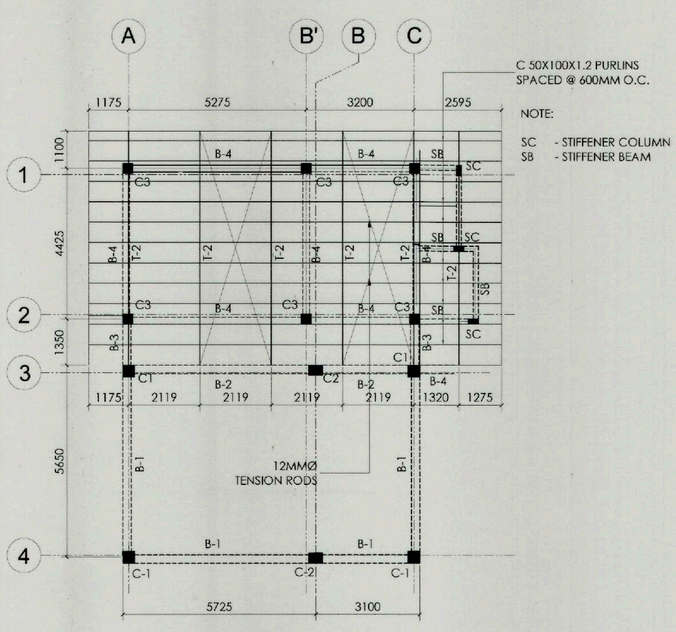

NOTE:

SC - STIFFENER COLUMN
SB - STIFFENER BEAM

1 S 04 ROOF FRAMING LAYOUT-1
SCALE 1:100

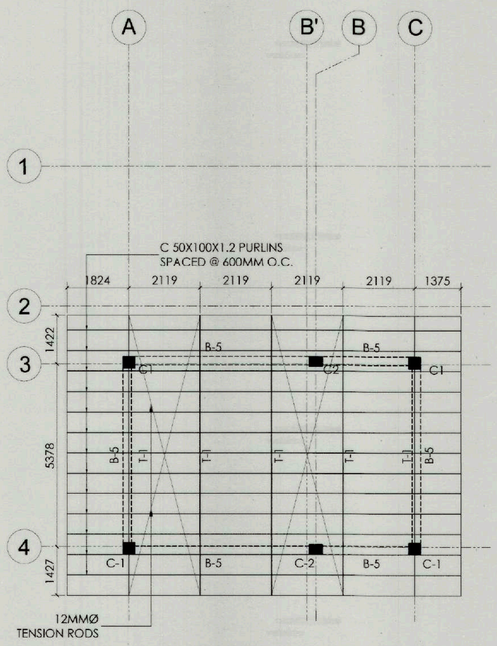

2 S 04 ROOF FRAMING LAYOUT-2
SCALE 1:100

SCHEDULE OF BEAMS

LEVEL	MARK	DIMENSION (MM)		REINFORCEMENTS					STIRRUPS	
		B	H	BAR POSITION	SUPPORT		MID SPAN		SIZE	SPACING
ELEV 3.4M	B-1	250	350	TOP BAR		5-16MMØ		3-16MMØ	10MMØ	1@50, 7@100, REST @ 200
				WEB BAR		-		-		
				BOTTOM BAR		3-16MMØ		3-16MMØ		
	B-2	250	350	TOP BAR		3-16MMØ		3-16MMØ	10MMØ	1@50, 7@100, REST@200
				WEB BAR		-		-		
				BOTTOM BAR		3-16MMØ		3-16MMØ		
	B-3	250	350	TOP BAR		3-16MMØ		3-16MMØ	10MMØ	REST@50
				WEB BAR		-		-		
				BOTTOM BAR		3-16MMØ		3-16MMØ		
	B-4	200	300	TOP BAR		2-16MMØ		2-16MMØ	10MMØ	1@50, 6@100, REST@200
				WEB BAR		-		-		
				BOTTOM BAR		2-16MMØ		2-16MMØ		
ELEV 6.0M	B-5	250	350	TOP BAR		3-16MMØ		3-16MMØ	10MMØ	1@50, 7@100, REST@200
				WEB BAR		-		-		
				BOTTOM BAR		3-16MMØ		3-16MMØ		

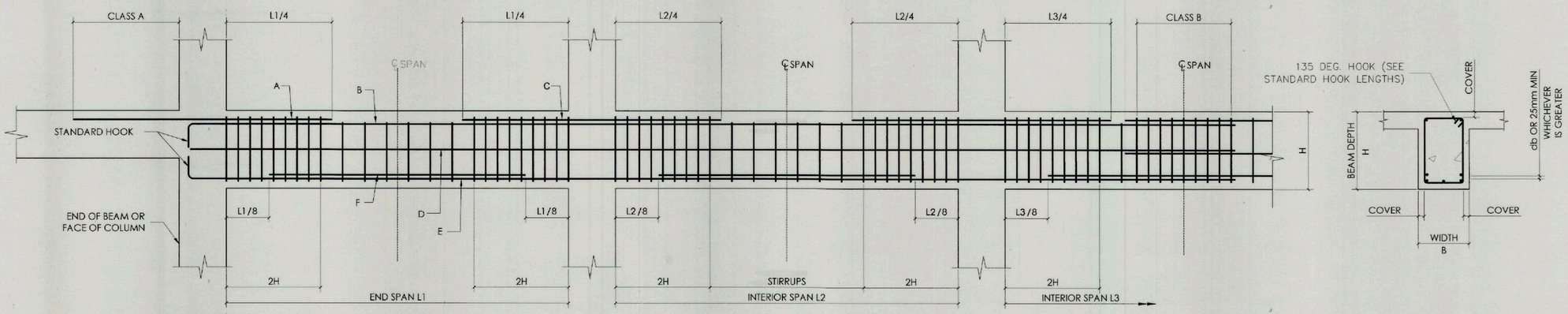

NOTE:

NO SPLICE SHALL BE CARRIED OUT WITHIN THE JOINTS AND WITHIN A DISTANCE OF 2H FROM THE FACE OF THE SUPPORTS

PROVIDE HOOPS THROUGH OUT LAP SPLICE LENGTH SPACED ≤ 100mm O.C.

LEGEND:

A EXTRA TOP BAR AT LEFT
B TOP BARS (CONTINUOUS)
C EXTRA TOP BAR AT RIGHT
D WEB BARS
E BOTTOM BARS (CONTINUOUS)
F EXTRA BOTTOM BARS

3 S 04 TYPICAL BEAM DETAIL
SCALE NTS

TIEZA
TOURISM INFRASTRUCTURE AND ENTERPRISE ZONE AUTHORITY
6th & 7th FLR. TOWER 1 DOUBLE DRAGON PLAZA
DOUBLE DRAGON MERIDIAN PARK, MACAPAGAL AVENUE
CORNER EDSA EXTENSION BAY AREA PASAY CITY 1308

PROJECT TITLE/LOCATION:
TOURIST SERVICE CENTER AND REST AREA
BRGY. PEÑAPLATA, IGACOS, DAVAO DEL NORTE AND BRGY. TANKULAN, MANOLO FORTICH, BUKIDNON

PROJECT EVALUATION AND PLANNING DEPARTMENT

PREPARED BY:	CHECKED BY:	REVIEWED BY:	RECOMMENDING APPROVAL:	APPROVED BY:
JOSEPH S. QUIBAN	RADY E. ADAME	JEOFFREY L. MACALALAD	GREGORY A. OLLER	MARK T. LAPID
DRAWN BY: JSQ	MANAGER PROJECT PLANNING & DESIGN DIVISION	OIC - MANAGER PROJECT EVALUATION & PLANNING DEPARTMENT	ASSISTANT CHIEF OPERATING OFFICER, ARCHITECTURAL AND ENGINEERING SERVICES SECTOR	CHIEF OPERATING OFFICER
DATE: SEPTEMBER 5, 2022				

SHEET CONTENTS:
ROOF FRAMING LAYOUT-1
ROOF FRAMING LAYOUT-2
SCHEDULE OF BEAMS
TYPICAL BEAM DETAILS

REVISIONS:

R.A. 9266

THIS DRAWING AS INSTRUMENT OF SERVICE IS A PROPERTY OF TIEZA. IT SHALL BE UNLAWFUL TO DUPLICATE OR TO MAKE COPIES OF THIS DOCUMENT WITHOUT THE CONCENT OF TIEZA.

SHEET NO. S 04 / 4 5

PEPD.QF.02a

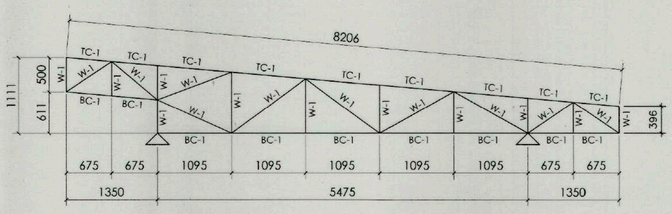

1 TRUSS-1 DETAIL
S 05 SCALE 1:50

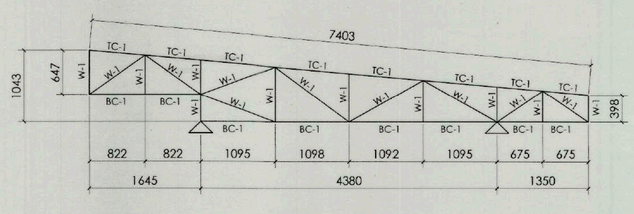

2 TRUSS-2 DETAIL
S 05 SCALE 1:50

SCHEDULE OF TRUSS MEMBERS		
MARK	DESCRIPTION	REMARKS
TC-1	2L-50X50X6MM	TOP CHORD
BC-1	2L-50X50X6MM	TOP CHORD
W-1	2L-40X40X5MM	WEB MEMBER

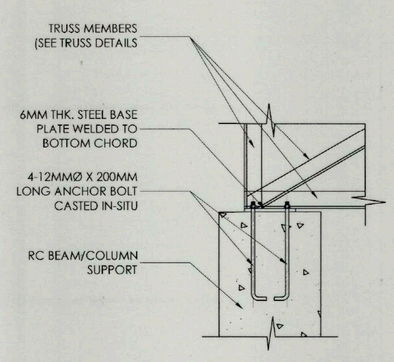

3 TYP. TRUSS SUPPORT CONNECTION DETAIL
S 05 SCALE 1:10

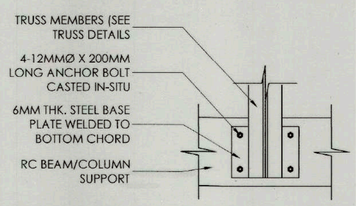

4 TYP. TRUSS SUPPORT CONNECTION DETAIL
S 05 SCALE 1:10

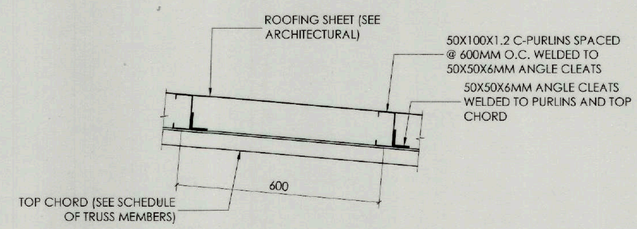

6 PURLIN CONNECTION DETAIL
S 05 SCALE 1:10

TIEZA
TOURISM INFRASTRUCTURE AND ENTERPRISE ZONE AUTHORITY
6th & 7th FLR. TOWER 1 DOUBLE DRAGON PLAZA
DOUBLE DRAGON MERIDIAN PARK, MACAPAGAL AVENUE
CORNER EDSA EXTENSION BAY AREA PASAY CITY 1308

PROJECT TITLE/LOCATION:
TOURIST SERVICE CENTER AND REST AREA
BRGY. PEÑAPLATA, IGACOS, DAVAO DEL NORTE AND BRGY. TANKULAN, MANOLO FORTICH, BUKIDNON

PROJECT EVALUATION AND PLANNING DEPARTMENT

PREPARED BY:	CHECKED BY:	REVIEWED BY:	RECOMMENDING APPROVAL:	APPROVED BY:
JOSEPH S. QUIBAN	RADY E. ADAME	JEOFFREY L. MACALALAD	GREGORY A. OLLER	MARK T. LAPID
DRAWN BY: JSQ	MANAGER PROJECT PLANNING & DESIGN DIVISION	OIC - MANAGER PROJECT EVALUATION & PLANNING DEPARTMENT	ASSISTANT CHIEF OPERATING OFFICER, ARCHITECTURAL AND ENGINEERING SERVICES SECTOR	CHIEF OPERATING OFFICER
DATE: SEPTEMBER 5, 2022				

SHEET CONTENTS:
TRUSS-1 DETAILS
TRUSS-2 DETAILS
SCHEDULE OF TRUSS MEMBERS
TYPICAL TRUSS SUPPORT CONNECTION DETAILS
PURLIN CONNECTION DETAILS

REVISIONS:

R.A. 9266

THIS DRAWING AS INSTRUMENT OF SERVICE IS A PROPERTY OF TIEZA. IT SHALL BE UNLAWFUL TO DUPLICATE OR TO MAKE COPIES OF THIS DOCUMENT WITHOUT THE CONCENT OF TIEZA.

SHEET NO. S 05 / 5 5

PEPD.QF.02a

ELECTRICAL NOTES

1. ALL ELECTRICAL WORKS & INSTALLATIONS HERE SHALL BE DONE IN ACCORDANCE WITH THE PROVISIONS OF THE LATEST APPROVED EDITION OF THE PHILIPPINE ELECTRICAL CODE WITH RULES & REGULATIONS OF THE CITY OR MUNICIPAL ORDINANCES AND ALSO THE RULES & REGULATIONS OF THE LOCAL POWER COMPANY.

2. ALL ELECTRICAL WORKS HEREIN SHALL BE DONE IN ENGINEERING AND WORKMANSHIP MANNER.

3. ALL ELECTRICAL WORKS HEREIN SHALL BE COORDINATED PROPERLY WITH OTHER ENGINEERING TRADE PRIOR TO THE IMPLEMENTATION TO ENSURE THE SMOOTH AND FLAWLESS FLOW OF WORK.

4. DISCREPANCIES OF THE ACTUAL INSTALLATION FROM THE APPROVED ELECTRICAL PLANS, IF ANY, SHALL BE DISCUSSED IMMEDIATELY WITH THE PROJECT MANAGER, DESIGN ARCHITECT, AND DESIGN ELECTRICAL ENGINEER PRIOR TO THE FITTING WORKS.

5. PROCESSING OF ALL NECESSARY DOCUMENTS SUCH AS PERMITS PASSES AND REQUEST LETTERS TO THE REQUIRING PARTY IF ANY, SHALL BE DONE BY THE CONTRACTOR AND ITS REPRESENTATIVE.

6. THE CONTRACTOR SHALL VERIFY THE ACTUAL LOCATION OF LOCAL UTILITY POWER SOURCE AND INSTALL THE MAIN SERVICE SERVICE ENTRANCE TO THE NEAREST POSSIBLE LOCATION OF THE POWER SOURCE.

7. THE TYPE OF SYSTEM VOLTAGE TO BE SUPPLIED SHALL BE 230 VOLTS, 1-PHASE, 3WIRE, 60HZ.

8. METERING TYPE TO BE USED SHALL BE DIRECT READING FOR 0-200 AMPERES LOAD. ALL METERING DEVICES SHALL BE CALIBRATED AND CERTIFIED BY THE ENERGY REGULATORY BOARD (ERB).

9. USE POLE MOUNTED DISTRIBUTION TRANSFORMER FOR BELOW 500KVA LOAD AND PAD MOUNTED TRANSFORMER FOR ABOVE 500KVA LOAD UNLESS OTHERWISE SPECIFIED BY LOCAL UTILITY POWER COMPANY.

10.ALL WIRES SHALL BE COLOR CODED TO SIMPLIFY AND EASE THE TERMINATION INTERCONNECTIONS AND CHECKING OF CONNECTIONS FOR THE ENTIRE WIRING SYSTEM. WIRE SHALL BE COLOR CODED AS FOLLOWS:
LINE 1: RED LINE 2: YELLOW LINE 3: BLUE GROUND: GREEN

11. FURTHERMORE, THE MINIMUM SIZE OF WIRE TO BE USE SHALL BE 2.0MM² THHN WIRE UNLESS OTHERWISE SPECIFIED IN THE PLANS

12. ALL CONDUIT TO BE USE THROUGHOUT THE INSTALLATION SHALL BE PVC FOR EMBEDDED IN CONCRETE , CONCEALED ON DRY WALL AND UNDERGROUND INSTALLATION, EMT FOR CONCEALED ON CEILING AND IMC FOR EXPOSED INSTALLATION AND MAIN FEEDER CABLE. THE MINIMUM SIZE TO BE UTILIZED SHALL BE 15MM INSIDE DIAMETER OTHERWISE SPECIFIED IN THE PLANS.

13. ALL BRANCH CIRCUIT HOMERUN SHALL BE INSTALLED AS INDICATED IN THE PLAN. EXPOSED CIRCUIT RUN SHALL BE INSTALLED PARALLEL TO OR PERPENDICULAR WITH THE BUILDING LINE AND SUPPORTED BY CONDUIT CLAMPS EVERY 1.5METERS. DIAGONAL CONDUIT RUN SHALL NOT BE ACCEPTED.

14. ALL ELECTRICAL EQUIPMENT SHALL BE FABRICATED IN ACCORDANCE WITH PEC2017 REQUIREMENTS SUCH AS STANDARD THICKNESS, BENDING SPACES, FILL SPACES, AND SAFETY SPACES BETWEEN HOT LINES.

15. ALL ELECTRICAL EQUIPMENT SHALL BE PROPERLY GROUNDED IN ACCORDANCE WITH THE REQUIREMENTS OF PEC 2017.

16. ALL ELECTRICAL EQUIPMENT, RACEWAYS AND DEVICES DRAWN IN THE PLANS ARE DIAGRAMMATIC, EXACT LOCATION IN THE ROOMS, WALLS, TRUSSES AND WALL PENETRATIONS SHALL BE DETERMINED AND DRAWN IN DETAIL BY THE ELECTRICAL ENGINEER IN-CHARGE OF THE INSTALLATION.

17. ALL ELECTRICAL WORK HERE IN SHALL UNDERGO NECESSARY TESTING UPON COMPLETION AND PRIOR TO THE ENERGIZATION
A. INSULATION RESISTANCE TEST - ALL WIRES AND CABLE
B. EARTH GROUND RESISTANCE TEST - GROUND SYSTEM AND EQUIPMENT GROUNDING
C. SYSTEM VOLTAGE TEST - UPON ENERGIZATION
D. PHASE SEQUENCE TEST - FOR ALL THREE PHASE LOADS

18. ALL ELECTRICAL EQUIPMENT, RACEWAYS, AND DEVICES INSTALLED FOR THE ELECTRICAL SYSTEM SHALL BE REFLECTED ON THE AS-BUILT PLAN WITH SIGN AND SEAL OF DULY LICENSED PROFESSIONAL ELECTRICAL ENGINEER.

19. ALL ELECTRICAL WORKS HEREIN SHALL BE DONE UNDER THE DIRECT AND IMMEDIATE SUPERVISION OF DULY REGISTERED ELECTRICAL ENGINEER (REE).

20. THE ELECTRICAL CONTRACTOR IS REQUIRED TO VISIT THE SITE TO ASCERTAIN HIMSELF TO THE LOCAL CONDITIONS THAT MAY AFFECT HIS WORK.

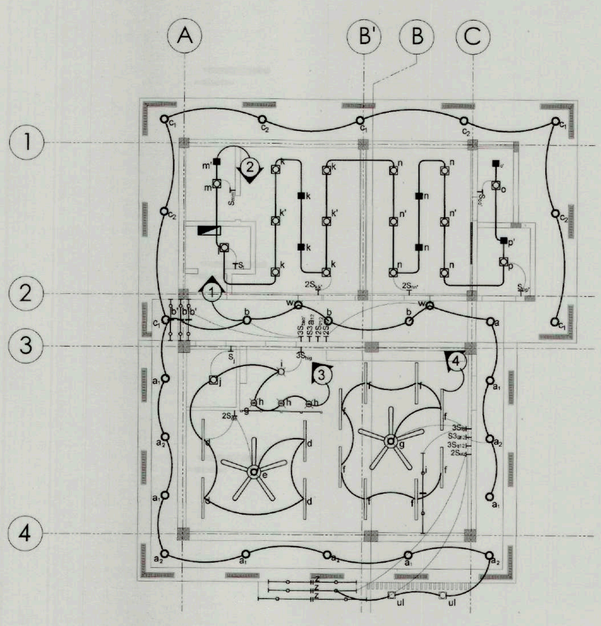

1 / E 01 LOWER CEILING LIGHTING LAYOUT
SCALE 1:100

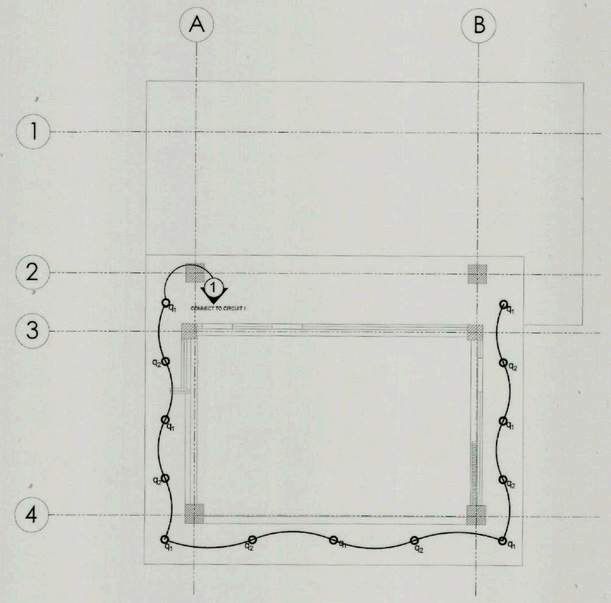

2 / E 01 UPPER CEILING LIGHTING LAYOUT
SCALE 1:100

NOTE: SEE MANUFACTURER/SUPPLIER INSTALLATION GUIDE.
LED POWER SUPPLY: INPUT-AC 220V OUTPUT: DC12V,
20-100WATTS
LED STRIP LIGHT 4.4W/FT
3/8" (10MM) WIDE LED TAPE FLEXIBLE STRIP LIGHTING,
5050 CHIP AMBER 2200K 4.4 WATTS,361 LUMENS PER
FOOT 12V, IP65 UL , 12VOLTS POWER SUPPLY,
TRIMMABLE CAN BE CUT EVERY 1-7/8".

1-GANG UNIVERSAL SOCKET WITH 2 USB PORT
TYPE A & C (16L x 5.5w x 7.5h cm)
TAMPER RESISTANT SHUTTER CHILD PROTECTION TO
PREVENT THE INSERTION OF FOREIGN OBJECT.
PLUG IN TYPE

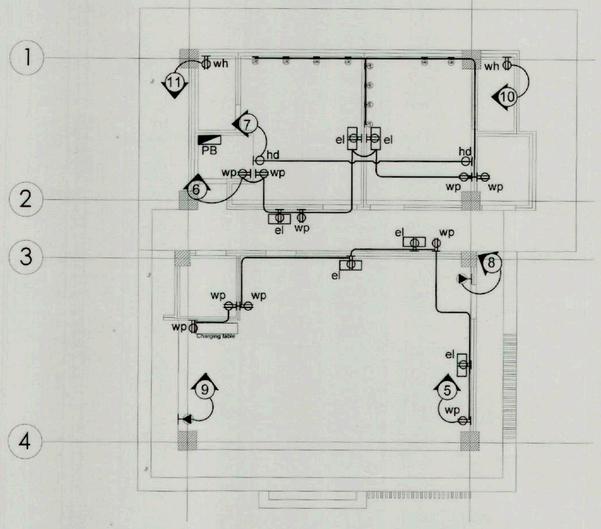

3 / E 01 POWER LAYOUT
SCALE 1:100

TIEZA TOURISM INFRASTRUCTURE AND ENTERPRISE ZONE AUTHORITY 6th & 7th FLR. TOWER 1 DOUBLE DRAGON PLAZA DOUBLE DRAGON MERIDIAN PARK, MACAPAGAL AVENUE CORNER EDSA EXTENSION BAY AREA PASAY CITY 1308	PROJECT TITLE/ LOCATION: TOURIST SERVICE CENTER AND REST AREA BRGY. PEÑAPLATA, IGACOS, DAVAO DEL NORTE AND BRGY. TANKULAN, MANOLO FORTICH, BUKIDNON	PROJECT EVALUATION AND PLANNING DEPARTMENT PREPARED BY: JERRY S. ESPINA DRAWN BY: JSE DATE: SEPTEMBER 5, 2022	CHECKED BY: RADY E. ADAME MANAGER PROJECT PLANNING & DESIGN DIVISION	REVIEWED BY: JEOFFREY L. MACALALAD OIC - MANAGER PROJECT EVALUATION & PLANNING DEPARTMENT	RECOMMENDING APPROVAL: GREGORY A. OLLER ASSISTANT CHIEF OPERATING OFFICER ARCHITECTURAL & ENGINEERING SERVICES SECTOR	APPROVED BY: MARK T. LAPID CHIEF OPERATING OFFICER	SHEET CONTENTS: ELECTRICAL LAYOUT LOWER CEILING LIGHTING LAYOUT UPPER CEILING LIGHTING LAYOUT POWER LAYOUT STAND ALONE SIGNAGE DETAIL REVISIONS:	R.A. 9266 THIS DRAWING AS INSTRUMENT OF SERVICE IS A PROPERTY OF TIEZA. IT SHALL BE UNLAWFUL TO DUPLICATE OR TO MAKE COPIES OF THIS DOCUMENT WITHOUT THE CONCENT OF TIEZA	SHEET NO. E 01 1 3

PEPD.QF.02a

LOAD SCHEDULE

ITEM NO.	DESCRIPTION	VOLTS	VA	SWITCHES 1S	SWITCHES 2S	SWITCHES 3S	SWITCHES S3	AMPERE	CIRCUIT PROTECTION AT	CIRCUIT PROTECTION AF	CIRCUIT PROTECTION P	WIRES SIZE & CONDUITS
1	37 - 16w LED PINLIGHT + 2 - 20W LED SPOT LIGHT + 180W STRIP LIGHT + WL	230	830		2		2	3.6	15	50	2	2 - 2.0mm² THHN Wire in 15mm² Ø RSC pipe
2	16 - 15w LED DROP LIGHT (COOL WHITE) + 7 - 50W EF	230	542	4	2			2.4	15	50	2	2 - 2.0mm² THHN Wire in 15mm² Ø RSC pipe
3	4 - 24W PENDANT LINEAR LIGHT + 1CF WITH 24W LED LIGHT + 3 - 12W RATTAN PENDANT LIGHT + 1 - 16W PINLIGHT + 1 - 16W DROPPED LIGHT	230	378	1	1	1		1.6	15	50 50	2 2	2 - 2.0mm² THHN Wire in 15mm² Ø RSC pipe
4	8 - 24W PENDANT LINEAR LIGHT + 1 - CF WITH 24W LED LIGHT + 35W STRIP LIGHT	230	441					1.9	15		2	2 - 2.0mm² THHN Wire in 15mm² Ø RSC pipe
5	5 - DUPLEX CONVENIENCE OUTLET + 3 - SINGLE EL OUTLET	230	900					3.9	20		2	2 - 3.5mm² THHN Wire & 1 - 2.0mm² THHN Grnding Wire in 20mm² Ø PVC pipe
6	5 - DUPLEX CONVENIENCE OUTLET + 3 - SINGLE EL OUTLET + 8FLUSHOMETER	230	900					3.9	20		2	2 - 3.5mm² THHN Wire & 1 - 2.0mm² THHN Grnding Wire in 20mm² Ø PVC pipe
7	3 - SINGLE CONVENIENCE OUTLET (HAND DRYER)	230	3000					13	20		2	2 - 3.5mm² THHN Wire & 1 - 2.0mm² THHN Grnding Wire in 20mm² Ø PVC pipe
8	ACU OUTLET (3TR) PROVISSION	230	3910					17	30		2	2 - 5.5mm² THHN Wire & 1 - 3.5mm² THHN Grnding Wire in 20mm² Ø PVC pipe
9	ACU OUTLET (3TR) PROVISSION	230	3910					17	30		2	2 - 5.5mm² THHN Wire & 1 - 3.5mm² THHN Grnding Wire in 20mm² Ø PVC pipe
10	WH OUTLET (PROVISSION)	230	3000					13	20		2	2 - 3.5mm² THHN Wire & 1 - 2.0mm² THHN Grnding Wire in 20mm² Ø PVC pipe
11	WH OUTLET (PROVISSION)	230	3000					13	20		2	2 - 3.5mm² THHN Wire & 1 - 2.0mm² THHN Grnding Wire in 20mm² Ø PVC pipe
12	SPARE	230	1000					–	–		–	– – – –

SERVICE ENTRANCE CONDUCTOR:
TOTAL CONNECTED LOAD = 21,811VA
Itotal = 94.8A @85% DF + 25% OF LARGEST MOTOR = 84.8A
USE: 2- 38mm² THWN WIRES, 1- 8.0mm² THWN COPPER G WIRE

SERVICE EQUIPMENT:
PROVIDE: 125AT-2POLE-150AF, 250VAC MCCB IN
32mm² RSC PIPE

DISTRIBUTION PANEL

BREAKER	NO.	POLE	AT AF
MAIN	1	2	125 , 150
BRANCHES	4	2	15 , 50
BRANCHES	6	2	20 , 50
BRANCHES	2	2	30 , 50

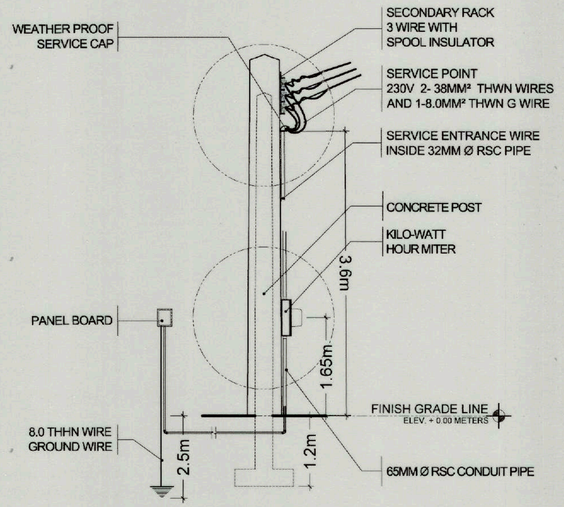

1 / E 02 ELECTRICAL POLE DETAIL
SCALE NTS

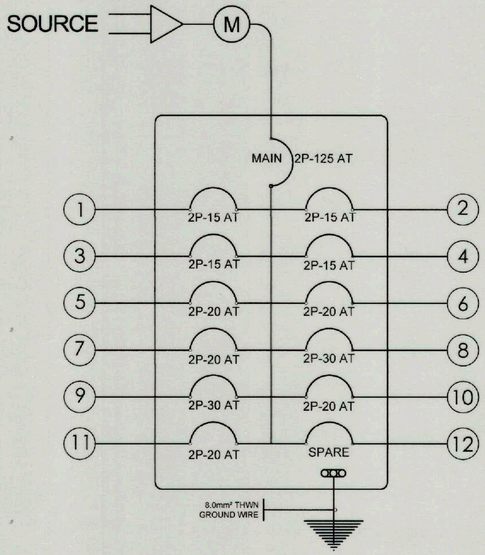

2 / E 02 SINGLE LINE DIAGRAM
SCALE NTS

LEGEND & SYMBOLS:

	PANELBOARD		
	16W LED DROPPED PINLIGHT IN 8"x8"X8" DECORATIVE WOOD BOX, COOL WHITE		ONE GANG CONVENIENCE OUTLET, GROUNDED TYPE FOR HAND DRYER
	4"Ø 16W REFLECTORIZED RECESSED LED PINLIGHT @ INCLINED PVC CEILING PANELS, COOL WHITE	wp	DUPLEX CONVENIENCE OUTLET, GROUNDED TYPE
	4"Ø 16W RECESSED LED PINLIGHT	wp	DUPLEX CONVENIENCE OUTLET, GROUNDED TYPE, WEATHER PROOF
ul	20W LED SPOT LIGHT FLOOR MOUNTED FLUSHED TYPE(WARM WHITE)	wh	DUPLEX CONVENIENCE OUTLET, GROUNDED TYPE, WATER HEATER
	CEILING FAN WITH 24W LED LIGHT		AIR-CONDITION UNIT OUTLET (SPLIT TYPE)
	12W RATTAN HANGING PENDANT LIGHT	hd	SINGLE CONVENIENCE OUTLET, GROUNDED TYPE, HAND DRYER
sl	30W LED STRIP LIGHT WITH DRIVER	el	SINGLE CONVENIENCE OUTLET, GROUNDED TYPE, EMERGENCY LIGHT
	5PCS 12W LED TRACK SPOTLIGHT, BLACK		EXHAUST FAN (CEILING MOUNTED)
	24W HANGING LINEAR LED CEILING LIGHT, WHITE (40 x 1200 x 70mm THK)		UTILITY BOX FOR SENSORED FLUSH VALVE (EMBEDED)
	9W LED WALL LAMP	S1	ONE GANG SWITCH, SUBSCRIPT/S DENOTE/S LIGHTS CONTROLLED
	CIRCUIT HOMERUN TO PANELBOARD	$2S_{ab}$	TWO GANG SWITCH, SUBSCRIPT/S DENOTE/S LIGHTS CONTROLLED
$3S_{abc}$	THREE GANG SWITCH, SUBSCRIPT/S DENOTE/S LIGHTS CONTROLLED	S3abc	THREE WAY SWITCH, SUBSCRIPT/S DENOTE/S LIGHTS CONTROLLED

TIEZA
TOURISM INFRASTRUCTURE AND ENTERPRISE ZONE AUTHORITY
6th & 7th FLR. TOWER 1 DOUBLE DRAGON PLAZA
DOUBLE DRAGON MERIDIAN PARK, MACAPAGAL AVENUE
CORNER EDSA EXTENSION BAY AREA PASAY CITY 1308

PROJECT TITLE/ LOCATION:
TOURIST SERVICE CENTER AND REST AREA
BRGY. PEÑAPLATA, IGACOS, DAVAO DEL NORTE AND BRGY. TANKULAN, MANOLO FORTICH, BUKIDNON

PROJECT EVALUATION AND PLANNING DEPARTMENT

PREPARED BY:	CHECKED BY:	REVIEWED BY:	RECOMMENDING APPROVAL:	APPROVED BY:
JERRY S. ESPINA	RADY E. ADAME	JEOFFREY L. MACALALAD	GREGORY A. OLLER	MARK T. LAPID
DRAWN BY: JSE	MANAGER, PROJECT PLANNING & DESIGN DIVISION	OIC - MANAGER, PROJECT EVALUATION & PLANNING DEPARTMENT	ASSISTANT CHIEF OPERATING OFFICER, ARCHITECTURAL & ENGINEERING SERVICES SECTOR	CHIEF OPERATING OFFICER
DATE: SEPTEMBER 5, 2022				

SHEET CONTENTS: ELECTRICAL POLE DETAIL, SINGLE LINE DIAGRAM
REVISIONS:
R.A. 9266
THIS DRAWING AS INSTRUMENT OF SERVICE IS A PROPERTY OF TIEZA. IT SHALL BE UNLAWFUL TO DUPLICATE OR TO MAKE COPIES OF THIS DOCUMENT WITHOUT THE CONCENT OF TIEZA.
SHEET NO. E 02 / 2 3

PEPD.QF.02a

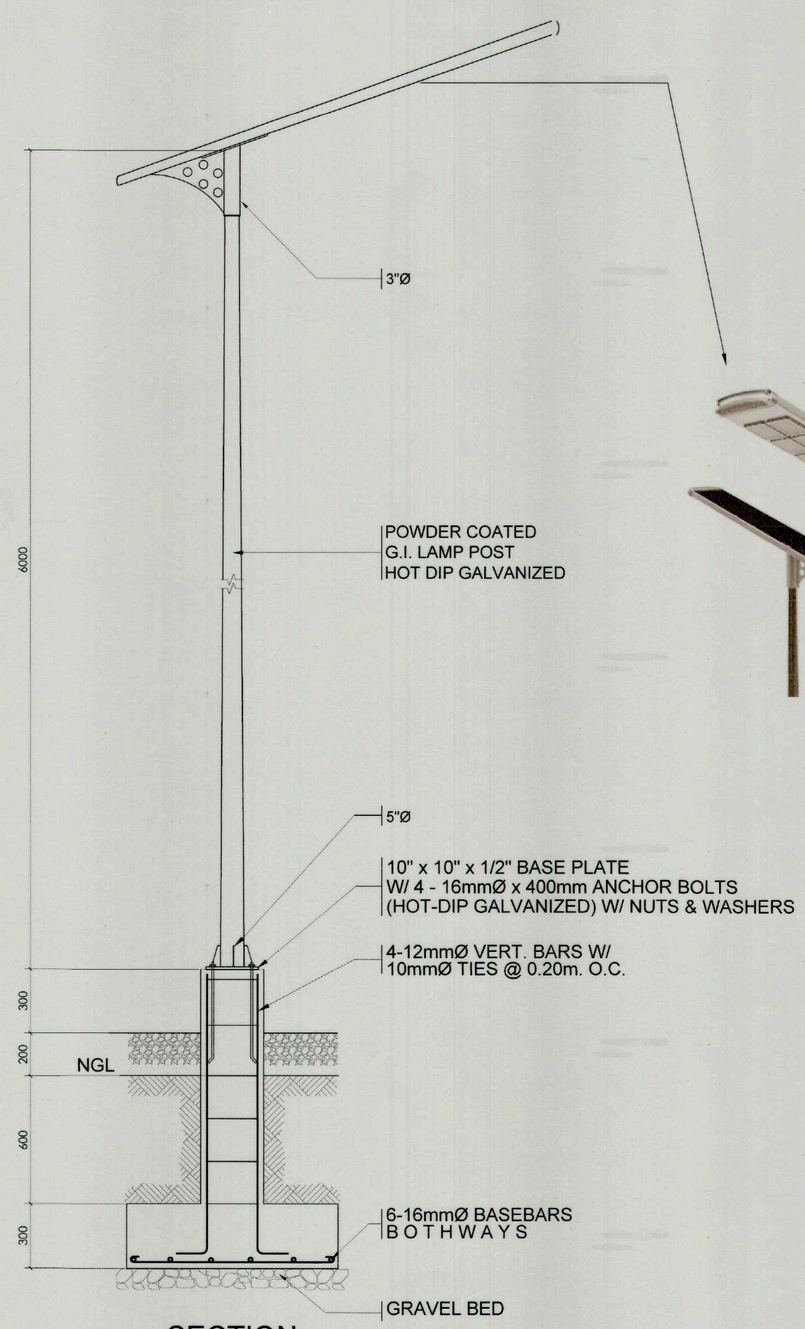

SECTION

LEGEND:

SOLAR PARK LIGHT:

SPECIFICATIONS
SOLAR:
- 60 watts All in-One Solar Integrated Street Light with timer
- DC12V Nominal Voltage
- Monocrystalline Solar Panel 110w/18v
- 6000lm(60W), 6500K CCT
- Aluminum Alloy + PC Fixture
- 60AH/12.8V Lithium Battery
- Smart Working Program
- IP65, C.R.I > 70

POLE: Tapered Hot Dip Galvanized
Powder Coated Steel Post
- 6.0m height, (5"Ø Bottom & 3"Ø Top)
- 12mm thk. 250mm x 250mm Base Plate
- 12mm thk x 100mm x 60mm Stiffener plate hot dip galvanized, powder coated steel with Anchor Bolt, Nut and washer

1 / E 02 STANDARD LAMP POST DETAIL
SCALE 1:25

TIEZA TOURISM INFRASTRUCTURE AND ENTERPRISE ZONE AUTHORITY 6th & 7th FLR. TOWER 1 DOUBLE DRAGON PLAZA DOUBLE DRAGON MERIDIAN PARK, MACAPAGAL AVENUE CORNER EDSA EXTENSION BAY AREA PASAY CITY 1308	PROJECT TITLE/ LOCATION:	PROJECT EVALUATION AND PLANNING DEPARTMENT			RECOMMENDING APPROVAL:	APPROVED BY:	SHEET CONTENTS:	R.A. 9266	SHEET NO.
	TOURIST SERVICE CENTER AND REST AREA BRGY. PEÑAPLATA, IGACOS, DAVAO DEL NORTE AND BRGY. TANKULAN, MANOLO FORTICH, BUKIDNON	PREPARED BY: JERRY S. ESPINA DRAWN BY: JSE DATE: SEPTEMBER 5, 2022	CHECKED BY: RADY E. ADAME MANAGER PROJECT PLANNING & DESIGN DIVISION	REVIEWED BY: JEOFFREY L. MACALALAD OIC - MANAGER PROJECT EVALUATION & PLANNING DEPARTMENT	GREGORY A. OLLER ASSISTANT CHIEF OPERATING OFFICER ARCHITECTURAL & ENGINEERING SERVICES SECTOR	MARK T. LAPID CHIEF OPERATING OFFICER	ELECTRICAL POLE DETAIL SINGLE LINE DIAGRAM REVISIONS:	THIS DRAWING AS INSTRUMENT OF SERVICE IS A PROPERTY OF TIEZA. IT SHALL BE UNLAWFUL TO DUPLICATE OR TO MAKE COPIES OF THIS DOCUMENT WITHOUT THE CONSENT OF TIEZA.	E 03 3 3

PEPD.QF.02a

GENERAL NOTES

1. ALL PLUMBING WORKS HEREIN INDICATED SHALL BE DONE IN ACCORDANCE WITH THE PROVISIONS OF THE LATEST EDITION OF THE PLUMBING CODE OF THE PHILIPPINES AND RULES AND REGULATIONS OF THE LOCAL ENFORCING AUTHORITIES.
2. ALL MATERIALS TO BE USED SHALL BE NEW AND OF APPROVED TYPE FOR THE PURPOSE.
3. MINIMUM SLOPE OF 2% SHALL BE APPROPRIATELY PROVIDED FOR PIPES FROM FIXTURES TO DISPOSAL OUTLET TO PROPERLY CONVEY SLUDGE AND OTHER WASTE MATERIALS.
4. ALL PIPES SHALL BE SUPPORTED AT SUFFICIENTLY CLOSE INTERVALS TO KEEP THEM IN ALIGNMENT AND PREVENT SAGGING.
5. THE PLUMBING LAYOUT IS ONLY DIAGRAMMATIC PIPES, CLEANOUTS AND CHECK VALVES SHALL BE CONCEALED AS MUCH AS POSSIBLE.
6. ALL CLEANOUTS SHALL BE FLUSHED MOUNTED AND PROVIDED WITH COVER CAPS. DO NOT INSTALL FLOOR CLEANOUTS EXCEPT AT LINES ON GRADE AND SERVICE AREAS NOT SERVICE TO TRAFFIC.
7. ALL PIPES SHALL BE INSTALLED AS INDICATED. ANY RELOCATION REQUIRED FOR PROPER EXECUTION OF OTHER TRADES SHALL BE WITH PRIOR APPROVAL FROM THE ENGINEER AND ARCHITECT.
8. ALL APPROVED PLANS, DOCUMENTS, REVISIONS TO PLANS MUST BE MAINTAINED ON SITE AND AVAILABLE FOR REVIEW AT ALL TIMES THE BUILDING IS UNDER CONSTRUCTION.
9. ALL PLUMBING WORKS HEREIN INDICATED SHALL BE DONE UNDER THE STRICT SUPERVISION OF A DULY LICENSED SANITARY ENGINEER AND/OR MASTERPLUMBER.

MATERIAL SPECIFICATION

COLD WATER LINE	ALL MAIN ROUGHING-INS OF TOILETS MATERIAL AND LATERAL WATER DISTRIBUTION LINES SHALL BE POLYPROPYLENE RANDOM COLYMER (PPR) PIPE AND FITTINGS. ALL ISOLATION VALVE SHOULD BE ¾" Ø IN SIZE.
SEWER LINE	ALL LATERAL AND BRANCH LINES SHALL BE POLYVINYL CHLORIDE (PVC) PIPES SERIES-1000. ALL LAVATORY DRAIN SHALL BE 2" Ø IN SIZE, WATER CLOSET DRAIN SHALL BE 4" Ø IN SIZE AND FLOOR DRAINS SHALL BE 3" Ø IN SIZE.
VENT LINE	ALL VENT STACK AND BRANCH LINE SHALL BE POLYVINYL CHLORIDE (PVC) PIPE SERIES-600
DRAINAGE LINE	ALL LATERAL AND BRANCH DRAINAGE LINE SHALL BE POLYVINYL CHLORIDE PIPE (PVC) PIPE SERIES-1000

LEGEND AND SYMBOLS

SEWER SYSTEM		VENTING SYSTEM	
SP	SEWER PIPE	VP	VENT PIPE
WC	WATER CLOSET	VS	VENT STACK
LAV	LAVATORY	VSTR	VENT STACK THRU ROOF
URI	URINAL		
FD	FLOOR DRAIN		
CO	CLEANOUT		
SS	SLOP SINK		

WATER DISTRIBUTION SYSTEM		DRAINAGE SYSTEM	
CWL	COLD WATER LINE	DP	DRAIN PIPE
GV	GATE VALVE	DS	DOWNSPOUT
WM	WATER METER	CB	CATCH BASIN
CV	CHECK VALVE		
SHO	SHOWER		
SV	SHOWER VALVE		
F	FAUCET		

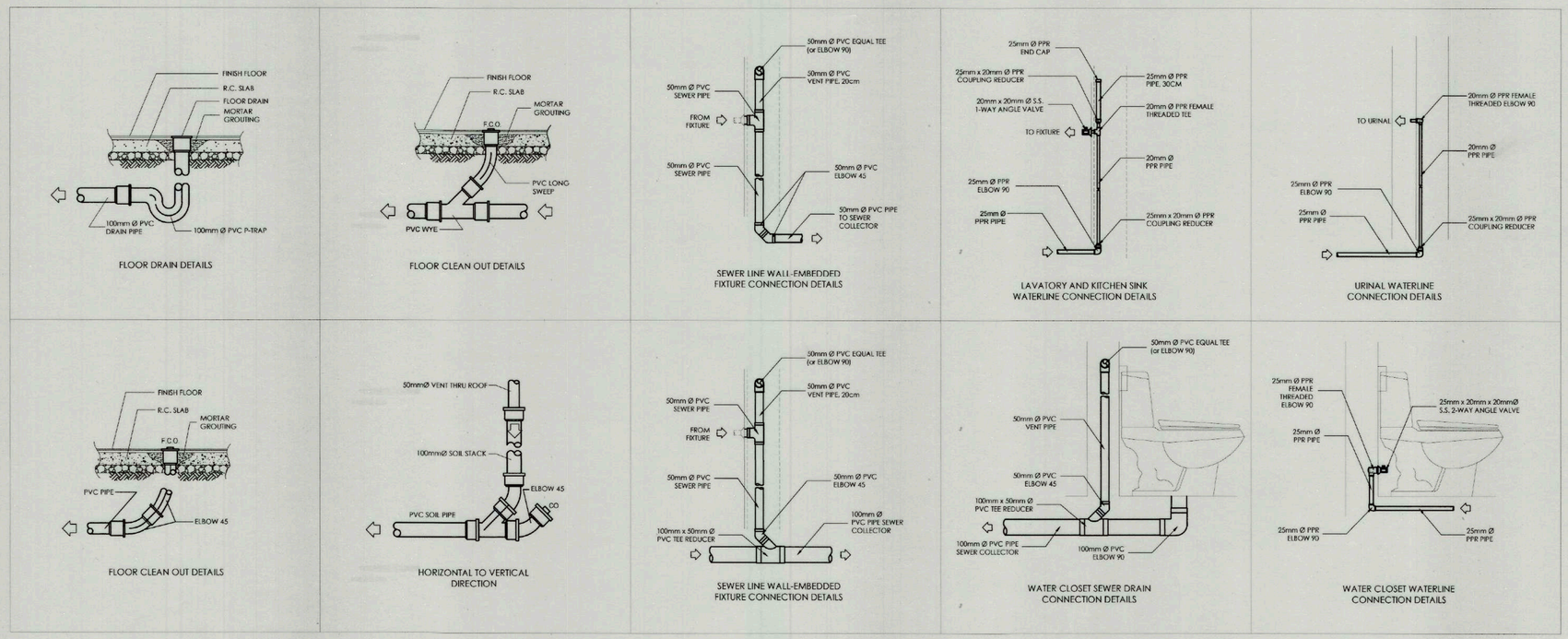

1 P 01 TYPICAL CONNECTION DETAILS
SCALE 1:20

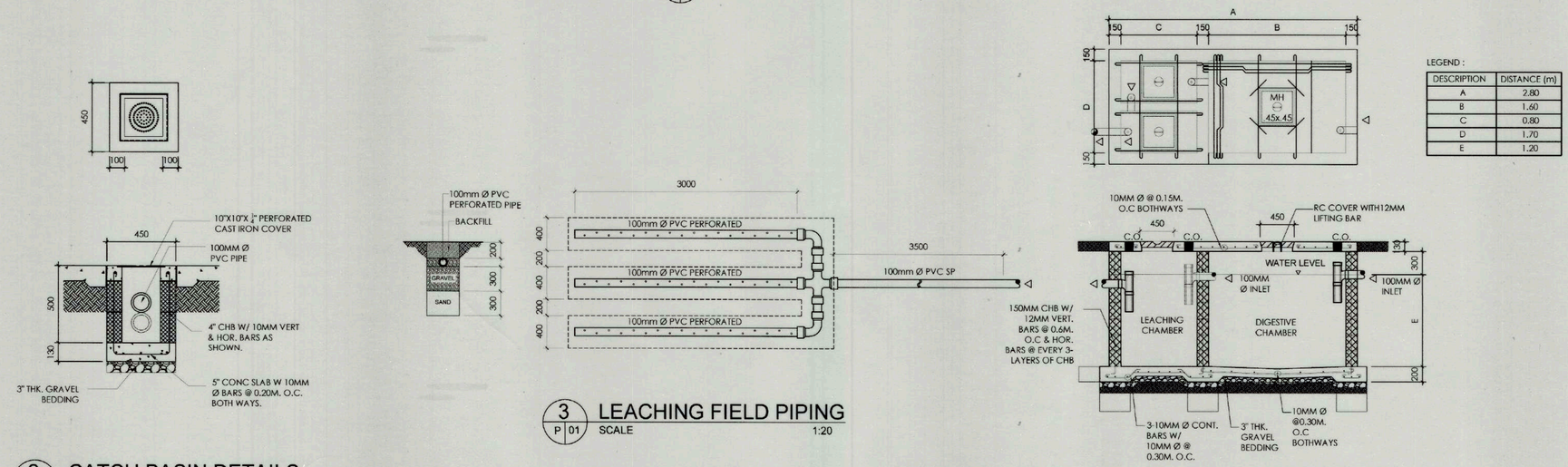

DESCRIPTION	DISTANCE (m)
A	2.80
B	1.60
C	0.80
D	1.70
E	1.20

2 P 01 CATCH BASIN DETAILS
SCALE 1:20

3 P 01 LEACHING FIELD PIPING
SCALE 1:20

4 P 01 SEPTIC TANK DETAILS
SCALE 1:20

TIEZA
TOURISM INFRASTRUCTURE AND ENTERPRISE ZONE AUTHORITY
6th & 7th FLR. TOWER 1 DOUBLE DRAGON PLAZA
DOUBLE DRAGON MERIDIAN PARK, MACAPAGAL AVENUE
CORNER EDSA EXTENSION BAY AREA PASAY CITY 1308

PROJECT TITLE/LOCATION:
TOURIST SERVICE CENTER AND REST AREA
BRGY. PEÑAPLATA, IGACOS, DAVAO DEL NORTE AND MANOLO FORTICH, BUKIDNON

PROJECT EVALUATION AND PLANNING DEPARTMENT

PREPARED BY:	CHECKED BY:	REVIEWED BY:	RECOMMENDING APPROVAL:	APPROVED BY:
JUNELL IAN T. MEDINO	RADY E. ADAME	JEOFFREY L. MACALALAD	GREGORY A. OLLER	MARK T. LAPID
DRAWN BY: JITM	MANAGER, PROJECT PLANNING & DESIGN DIVISION	OIC - MANAGER, PROJECT EVALUATION & PLANNING DEPARTMENT	ASSISTANT CHIEF OPERATING OFFICER, ARCHITECTURAL AND ENGINEERING SERVICES SECTOR	CHIEF OPERATING OFFICER
DATE: SEPTEMBER 5, 2022				

SHEET CONTENTS:
TYPICAL CONN. DETAILS
GENERAL NOTES
CATCH BASIN DETAILS
LEACHING FIELD
SEPTIC TANK DETAILS

REVISIONS:

R.A. 9266

THIS DRAWING AS INSTRUMENT OF SERVICE IS A PROPERTY OF TIEZA. IT SHALL BE UNLAWFUL TO DUPLICATE OR TO MAKE COPIES OF THIS DOCUMENT WITHOUT THE CONCENT OF TIEZA.

SHEET NO. P 01 / 1 7

PEPD.QF.02a

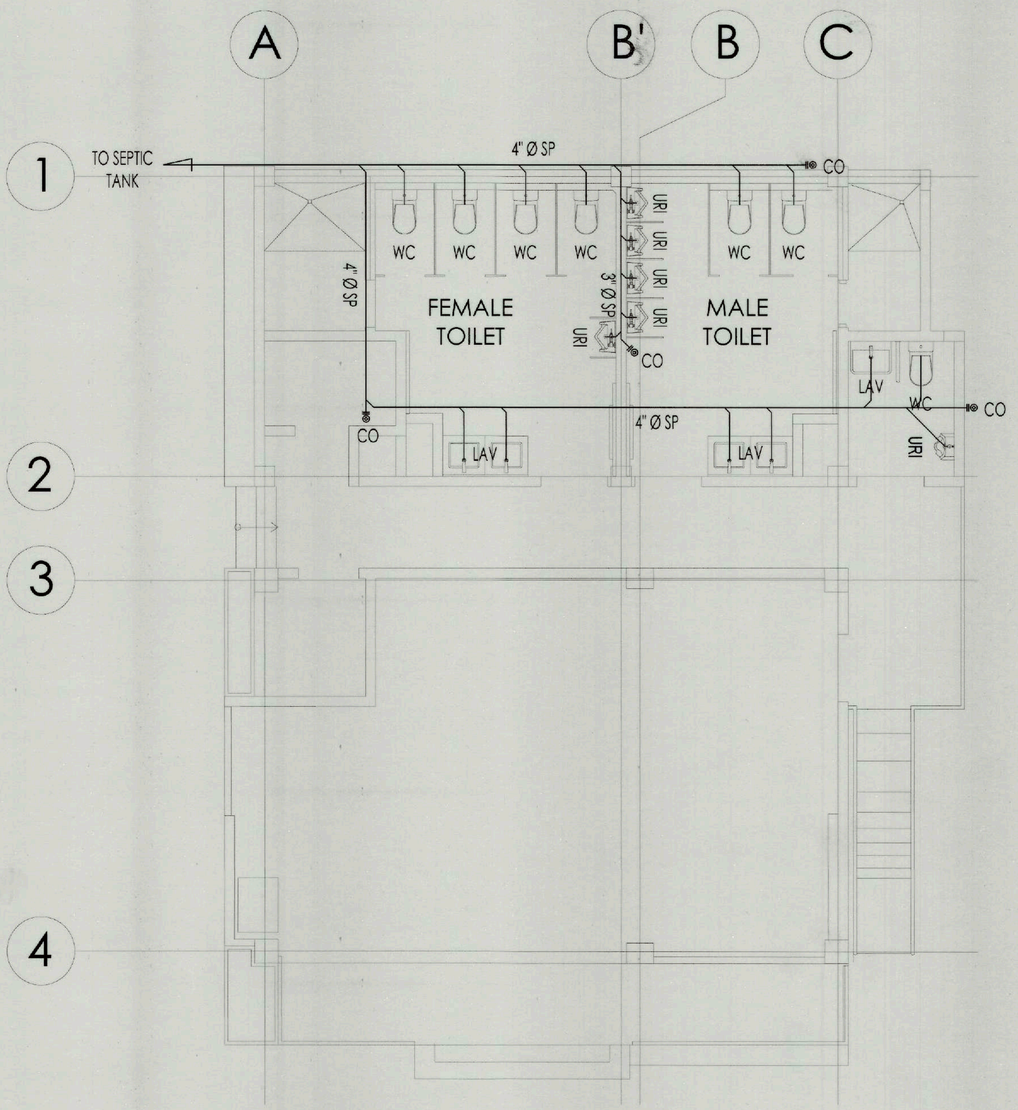

1 P 02 SEWERLINE LAYOUT
SCALE 1:50

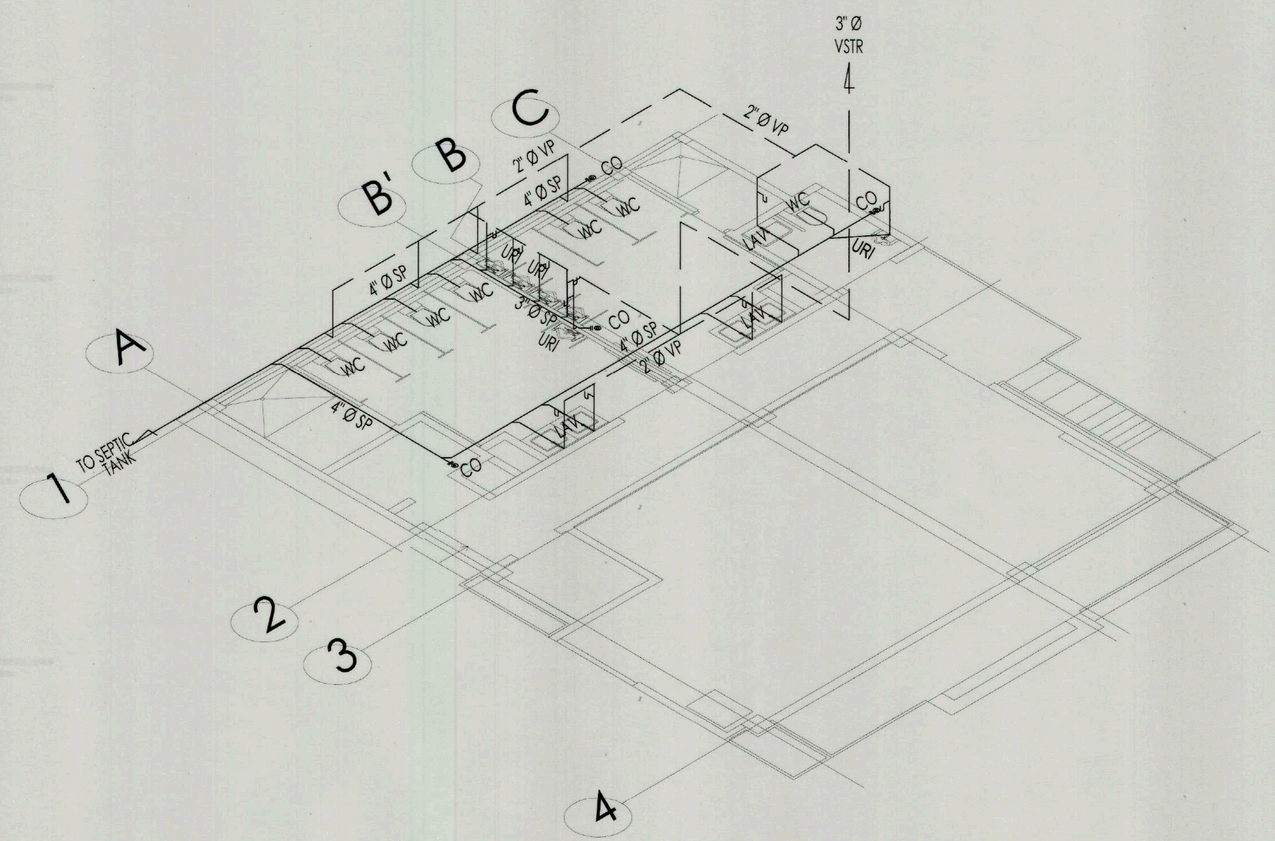

2 P 02 SEWERLINE ISOMETRIC VIEW
SCALE 1:50

SAMAL

TIEZA
TOURISM INFRASTRUCTURE AND ENTERPRISE ZONE AUTHORITY
6th & 7th FLR. TOWER 1 DOUBLE DRAGON PLAZA
DOUBLE DRAGON MERIDIAN PARK, MACAPAGAL AVENUE
CORNER EDSA EXTENSION BAY AREA PASAY CITY 1308

PROJECT TITLE/LOCATION:
TOURIST SERVICE CENTER AND REST AREA
BRGY. PEÑAPLATA, IGACOS, DAVAO DEL NORTE AND MANOLO FORTICH, BUKIDNON

PROJECT EVALUATION AND PLANNING DEPARTMENT

PREPARED BY:	CHECKED BY:	REVIEWED BY:	RECOMMENDING APPROVAL:	APPROVED BY:
JUNELL IAN T. MEDINO	RADY E. ADAME	JEOFFREY L. MACALALAD	GREGORY A. OLLER	MARK T. LAPID
DRAWN BY: JITM	MANAGER, PROJECT PLANNING & DESIGN DIVISION	OIC - MANAGER, PROJECT EVALUATION & PLANNING DEPARTMENT	ASSISTANT CHIEF OPERATING OFFICER, ARCHITECTURAL AND ENGINEERING SERVICES SECTOR	CHIEF OPERATING OFFICER
DATE: SEPTEMBER 5, 2022				

SHEET CONTENTS: SEWERLINE LAY-OUT SEWERLINE ISOMETRIC VIEW

REVISIONS:

R.A. 9266: THIS DRAWING AS INSTRUMENT OF SERVICE IS A PROPERTY OF TIEZA. IT SHALL BE UNLAWFUL TO DUPLICATE OR TO MAKE COPIES OF THIS DOCUMENT WITHOUT THE CONCENT OF TIEZA.

SHEET NO. P 02 / 2 7

PEPD.QF.02a

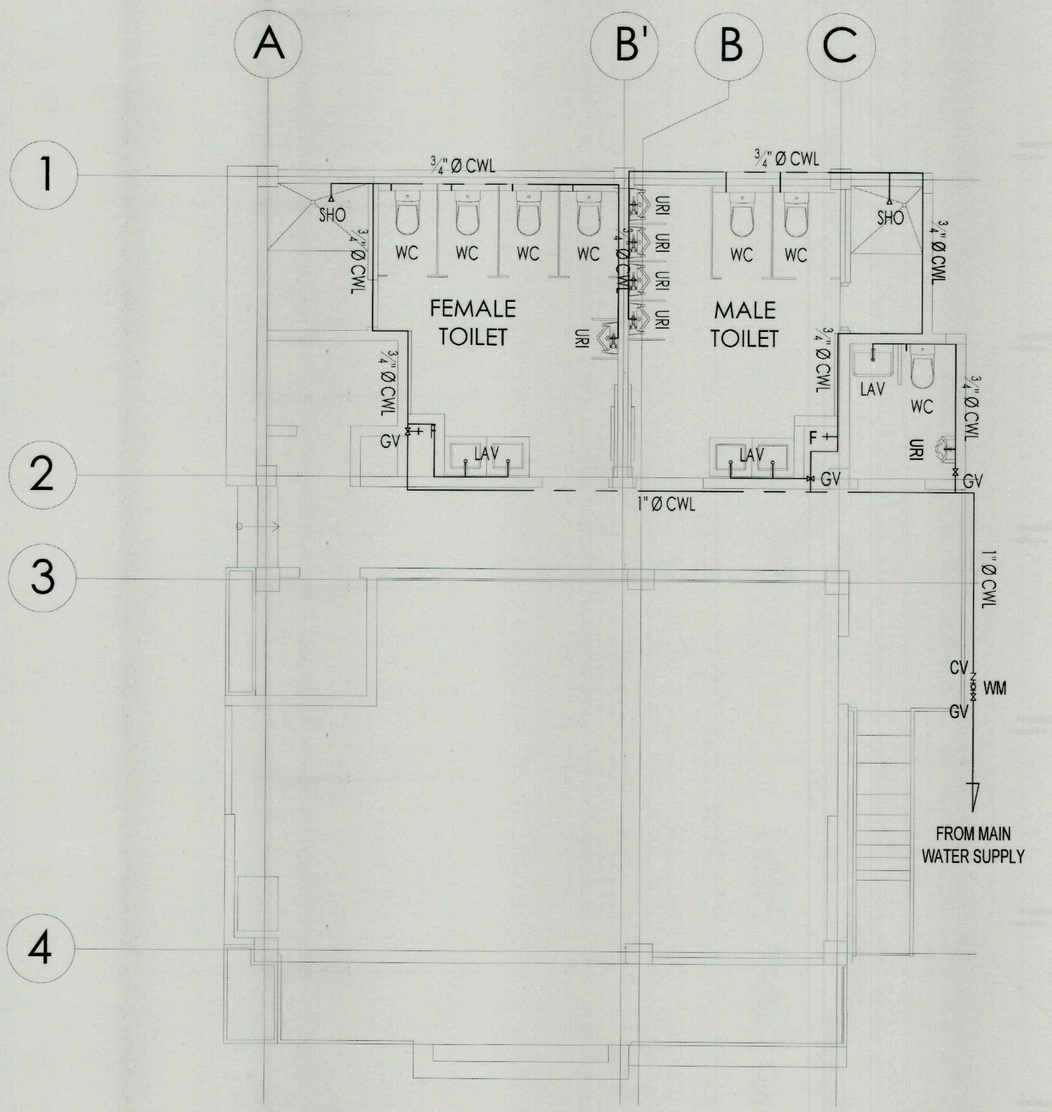

1 P 03 WATERLINE LAYOUT
SCALE 1:50

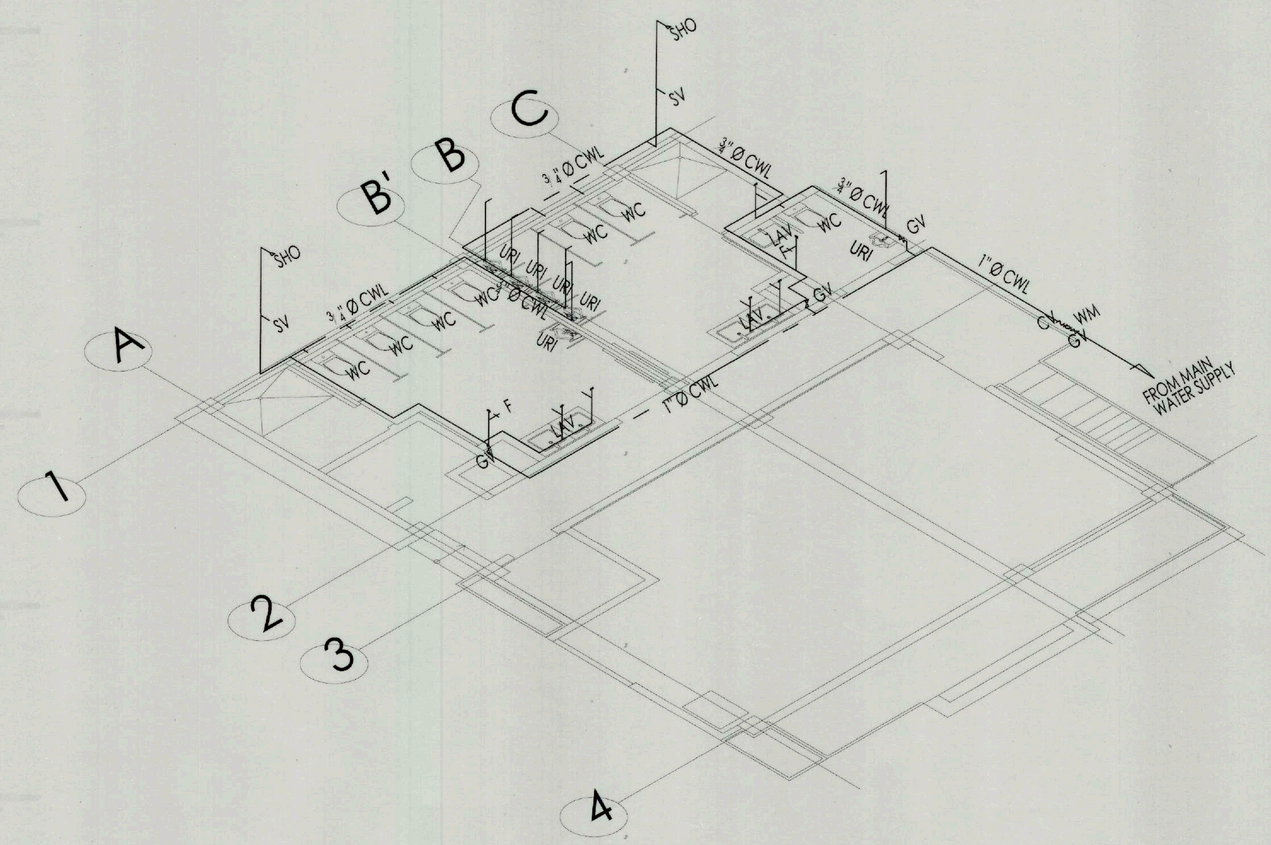

2 P 03 WATERLINE ISOMETRIC VIEW
SCALE 1:50

SAMAL

TIEZA
TOURISM INFRASTRUCTURE AND ENTERPRISE ZONE AUTHORITY
6th & 7th FLR. TOWER 1 DOUBLE DRAGON PLAZA
DOUBLE DRAGON MERIDIAN PARK, MACAPAGAL AVENUE
CORNER EDSA EXTENSION BAY AREA PASAY CITY 1308

PROJECT TITLE/LOCATION:
TOURIST SERVICE CENTER AND REST AREA
BRGY. PEÑAPLATA, IGACOS, DAVAO DEL NORTE AND MANOLO FORTICH, BUKIDNON

PROJECT EVALUATION AND PLANNING DEPARTMENT

PREPARED BY:	CHECKED BY:	REVIEWED BY:	RECOMMENDING APPROVAL:	APPROVED BY:
JUNELL IAN T. MEDINO	RADY E. ADAME	JEOFFREY L. MACALALAD	GREGORY A. OLLER	MARK T. LAPID
DRAWN BY: JITM	MANAGER, PROJECT PLANNING & DESIGN DIVISION	OIC - MANAGER, PROJECT EVALUATION & PLANNING DEPARTMENT	ASSISTANT CHIEF OPERATING OFFICER, ARCHITECTURAL AND ENGINEERING SERVICES SECTOR	CHIEF OPERATING OFFICER
DATE: SEPTEMBER 5, 2022				

SHEET CONTENTS: WATERLINE LAY-OUT WATERLINE ISOMETRIC VIEW

REVISIONS:

R.A. 9266

THIS DRAWING AS INSTRUMENT OF SERVICE IS A PROPERTY OF TIEZA IT SHALL BE UNLAWFUL TO DUPLICATE OR TO MAKE COPIES OF THIS DOCUMENT WITHOUT THE CONCENT OF TIEZA.

SHEET NO. P 03 / 3 7

PEPD.QF.02a

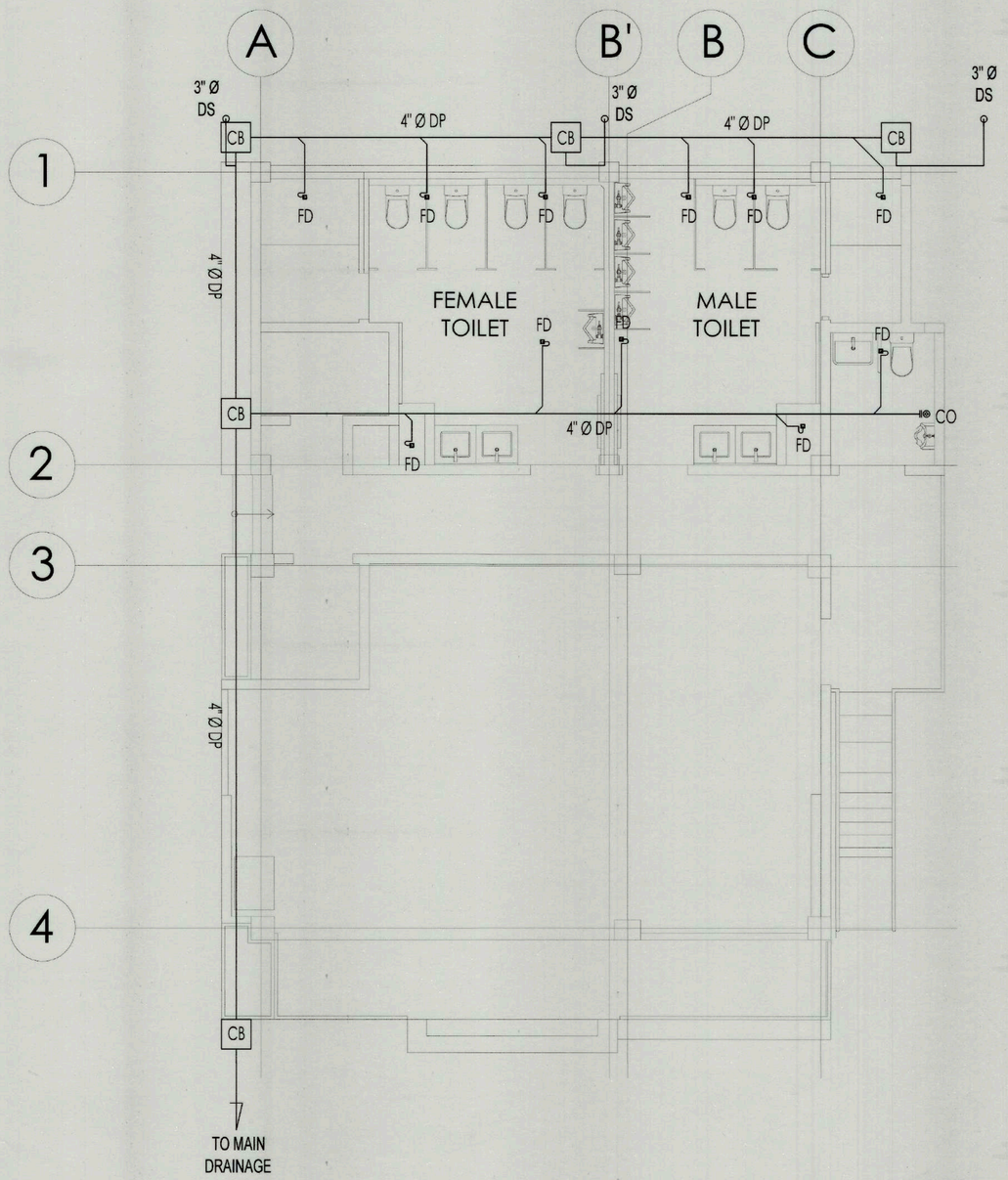

1 P 04 DRAINAGE LAYOUT
SCALE 1:50

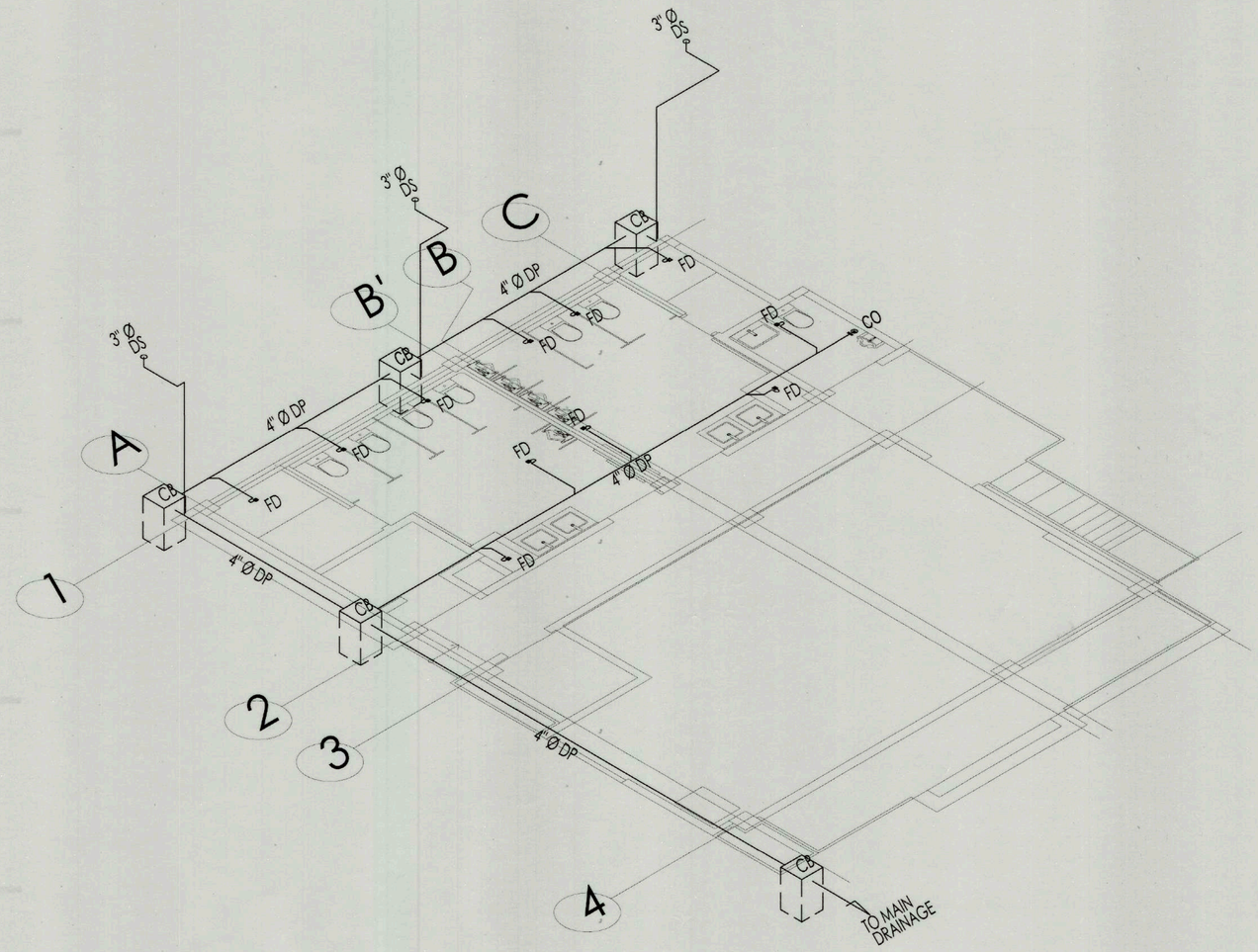

2 P 04 DRAINAGE ISOMETRIC VIEW
SCALE 1:50

SAMAL

TIEZA
TOURISM INFRASTRUCTURE AND ENTERPRISE ZONE AUTHORITY
6th & 7th FLR. TOWER 1 DOUBLE DRAGON PLAZA
DOUBLE DRAGON MERIDIAN PARK, MACAPAGAL AVENUE
CORNER EDSA EXTENSION BAY AREA PASAY CITY 1308

PROJECT TITLE/LOCATION:
TOURIST SERVICE CENTER AND REST AREA
BRGY. PEÑAPLATA, IGACOS, DAVAO DEL NORTE AND MANOLO FORTICH, BUKIDNON

PROJECT EVALUATION AND PLANNING DEPARTMENT

PREPARED BY:	CHECKED BY:	REVIEWED BY:	RECOMMENDING APPROVAL:	APPROVED BY:
JUNELL IAN T. MEDINO	RADY E. ADAME	JEOFFREY L. MACALALAD	GREGORY A. OLLER	MARK T. LAPID
DRAWN BY: JITM	MANAGER PROJECT PLANNING & DESIGN DIVISION	OIC - MANAGER PROJECT EVALUATION & PLANNING DEPARTMENT	ASSISTANT CHIEF OPERATING OFFICER, ARCHITECTURAL AND ENGINEERING SERVICES SECTOR	CHIEF OPERATING OFFICER
DATE: SEPTEMBER 5, 2022				

SHEET CONTENTS: DRAINAGE LAY-OUT DRAINAGE ISOMETRIC VIEW
REVISIONS:

R.A. 9266
THIS DRAWING AS INSTRUMENT OF SERVICE IS A PROPERTY OF TIEZA. IT SHALL BE UNLAWFUL TO DUPLICATE OR TO MAKE COPIES OF THIS DOCUMENT WITHOUT THE CONCENT OF TIEZA.

SHEET NO. P 04 / 4 7

PEPD.QF.02a

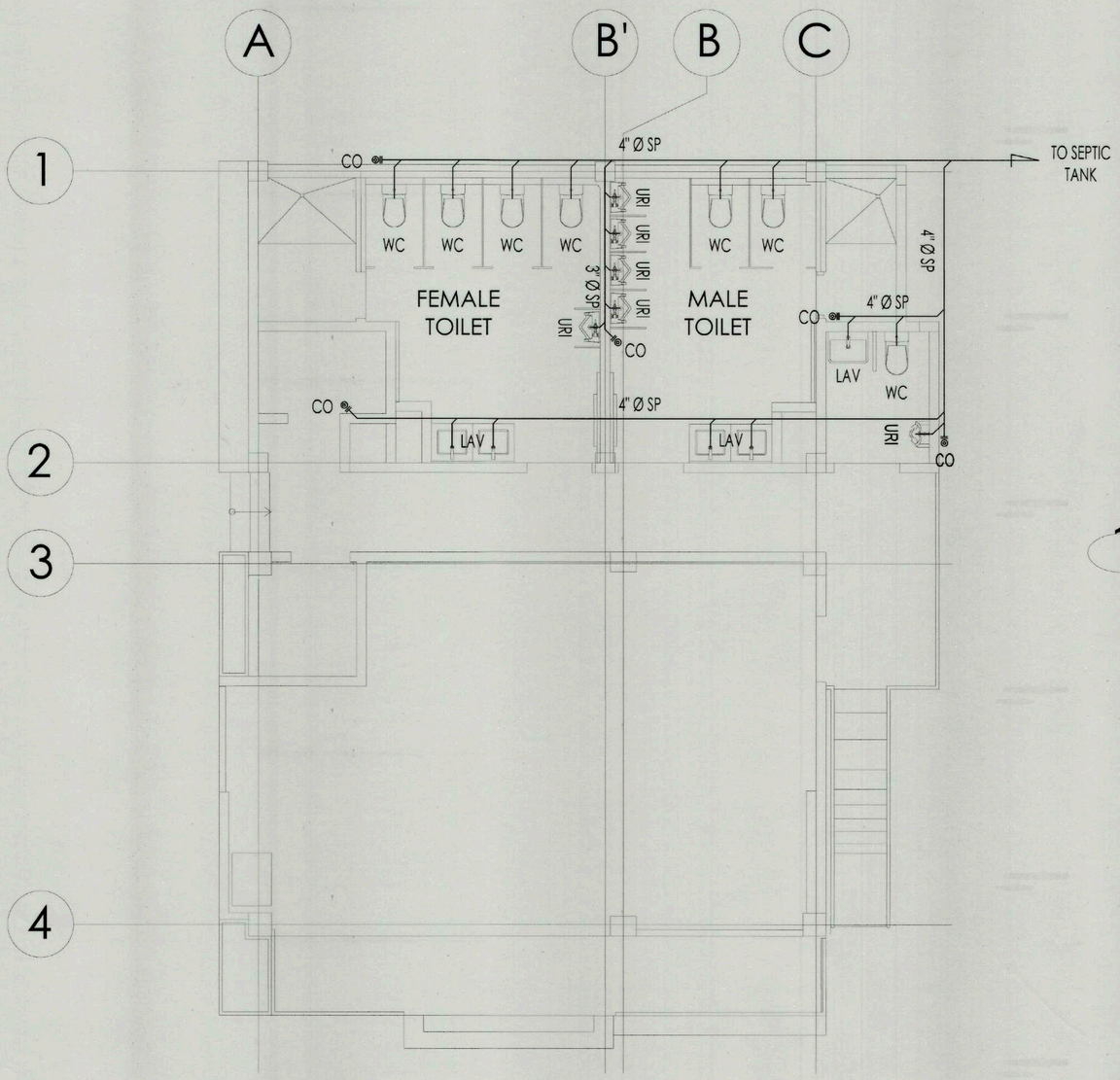

1 P 05 SEWERLINE LAYOUT
SCALE 1:50

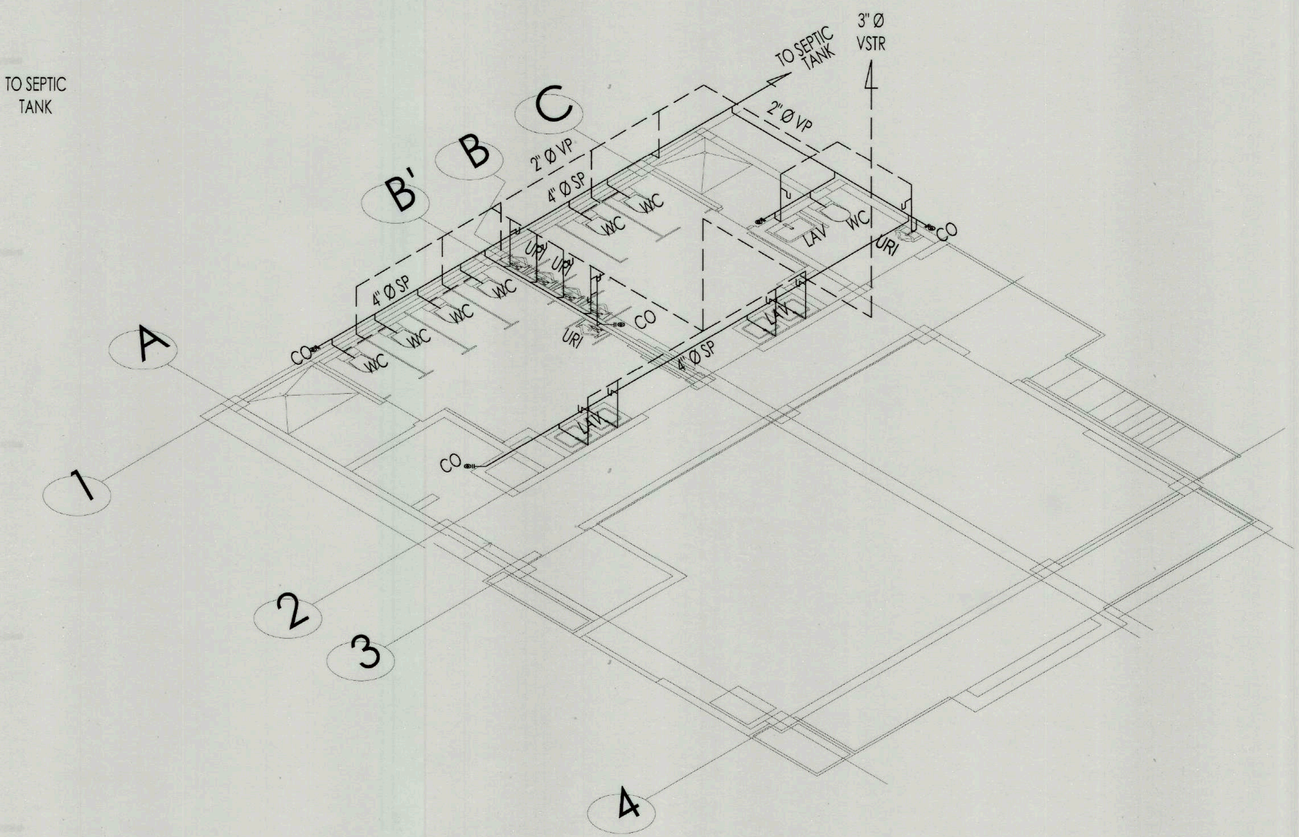

2 P 05 SEWERLINE ISOMETRIC VIEW
SCALE 1:50

MANOLO FORTICH

TIEZA
TOURISM INFRASTRUCTURE AND ENTERPRISE ZONE AUTHORITY
6th & 7th FLR. TOWER 1 DOUBLE DRAGON PLAZA
DOUBLE DRAGON MERIDIAN PARK. MACAPAGAL AVENUE
CORNER EDSA EXTENSION BAY AREA PASAY CITY 1308

PROJECT TITLE/LOCATION:
TOURIST SERVICE CENTER AND REST AREA
BRGY. PEÑAPLATA, IGACOS, DAVAO DEL NORTE AND MANOLO FORTICH, BUKIDNON

PROJECT EVALUATION AND PLANNING DEPARTMENT

PREPARED BY:	CHECKED BY:	REVIEWED BY:	RECOMMENDING APPROVAL:	APPROVED BY:
JUNELL IAN T. MEDINO	RADY E. ADAME	JEOFFREY L. MACALALAD	GREGORY A. OLLER	MARK T. LAPID
DRAWN BY: JITM	MANAGER PROJECT PLANNING & DESIGN DIVISION	OIC - MANAGER PROJECT EVALUATION & PLANNING DEPARTMENT	ASSISTANT CHIEF OPERATING OFFICER, ARCHITECTURAL AND ENGINEERING SERVICES SECTOR	CHIEF OPERATING OFFICER
DATE: SEPTEMBER 5, 2022				

SHEET CONTENTS: SEWERLINE LAY-OUT SEWERLINE ISOMETRIC VIEW
REVISIONS:

R.A. 9266

THIS DRAWING AS INSTRUMENT OF SERVICE IS A PROPERTY OF TIEZA. IT SHALL BE UNLAWFUL TO DUPLICATE OR TO MAKE COPIES OF THIS DOCUMENT WITHOUT THE CONCENT OF TIEZA.

SHEET NO. P 05 / 5 7

PEPD.QF.02a

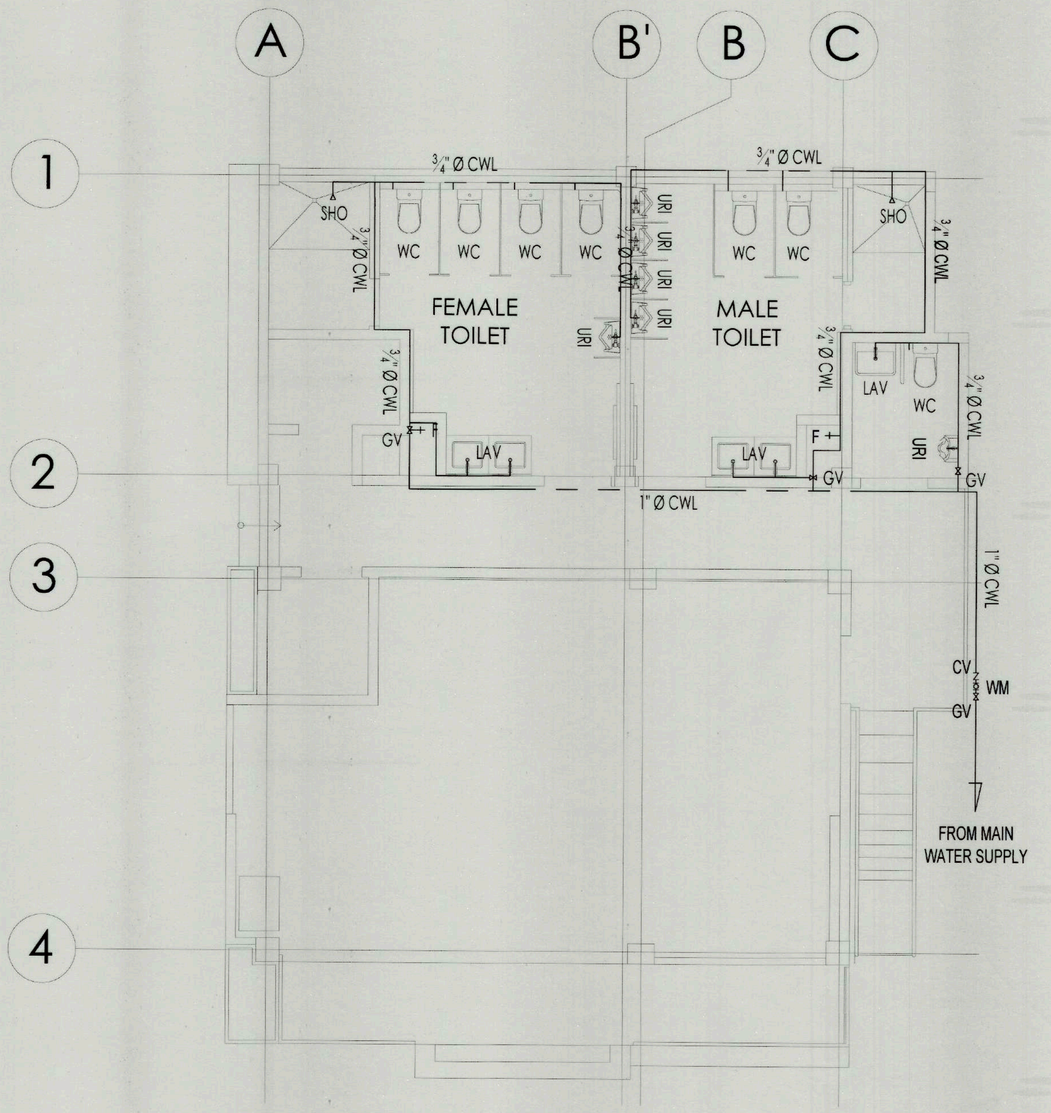

1 P 06 WATERLINE LAYOUT
SCALE 1:50

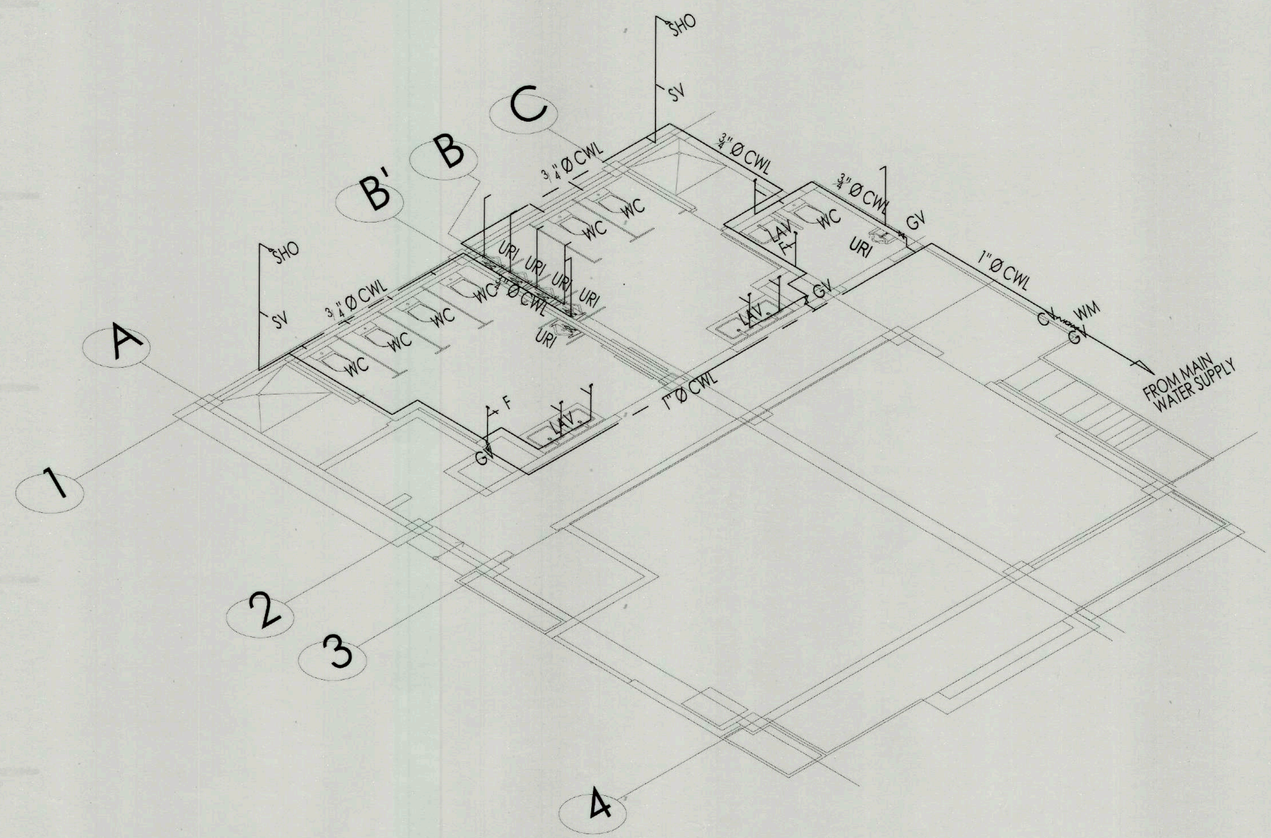

2 P 06 WATERLINE ISOMETRIC VIEW
SCALE 1:50

MANOLO FORTICH

TIEZA TOURISM INFRASTRUCTURE AND ENTERPRISE ZONE AUTHORITY 6th & 7th FLR. TOWER 1 DOUBLE DRAGON PLAZA DOUBLE DRAGON MERIDIAN PARK, MACAPAGAL AVENUE CORNER EDSA EXTENSION BAY AREA PASAY CITY 1308	PROJECT TITLE/LOCATION: **TOURIST SERVICE CENTER AND REST AREA** BRGY. PEÑAPLATA, IGACOS, DAVAO DEL NORTE AND MANOLO FORTICH, BUKIDNON	PROJECT EVALUATION AND PLANNING DEPARTMENT PREPARED BY: JUNELL IAN T. MEDINO DRAWN BY: JITM DATE: SEPTEMBER 5, 2022	CHECKED BY: RADY E. ADAME MANAGER PROJECT PLANNING & DESIGN DIVISION	REVIEWED BY: JEOFFREY L. MACALALAD OIC - MANAGER PROJECT EVALUATION & PLANNING DEPARTMENT	RECOMMENDING APPROVAL: GREGORY A. OLLER ASSISTANT CHIEF OPERATING OFFICER, ARCHITECTURAL AND ENGINEERING SERVICES SECTOR	APPROVED BY: MARK T. LAPID CHIEF OPERATING OFFICER	SHEET CONTENTS: WATERLINE LAY-OUT WATERLINE ISOMETRIC VIEW REVISIONS:	R.A. 9266 THIS DRAWING AS INSTRUMENT OF SERVICE IS A PROPERTY OF TIEZA. IT SHALL BE UNLAWFUL TO DUPLICATE OR TO MAKE COPIES OF THIS DOCUMENT WITHOUT THE CONSENT OF TIEZA	SHEET NO. P 06 / 6 7

PEPD.QF.02a

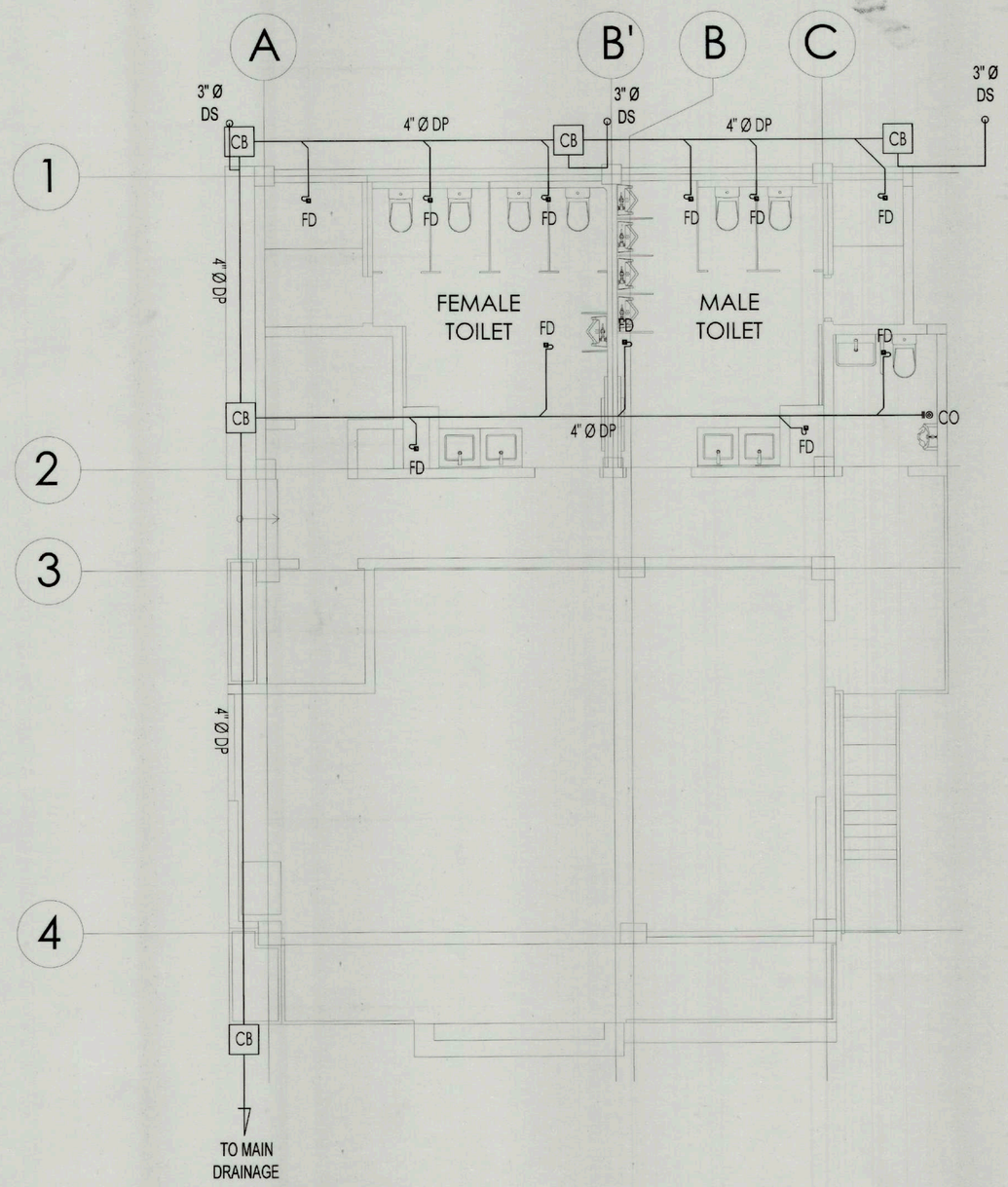

1 P 07 DRAINAGE LAYOUT
SCALE 1:50

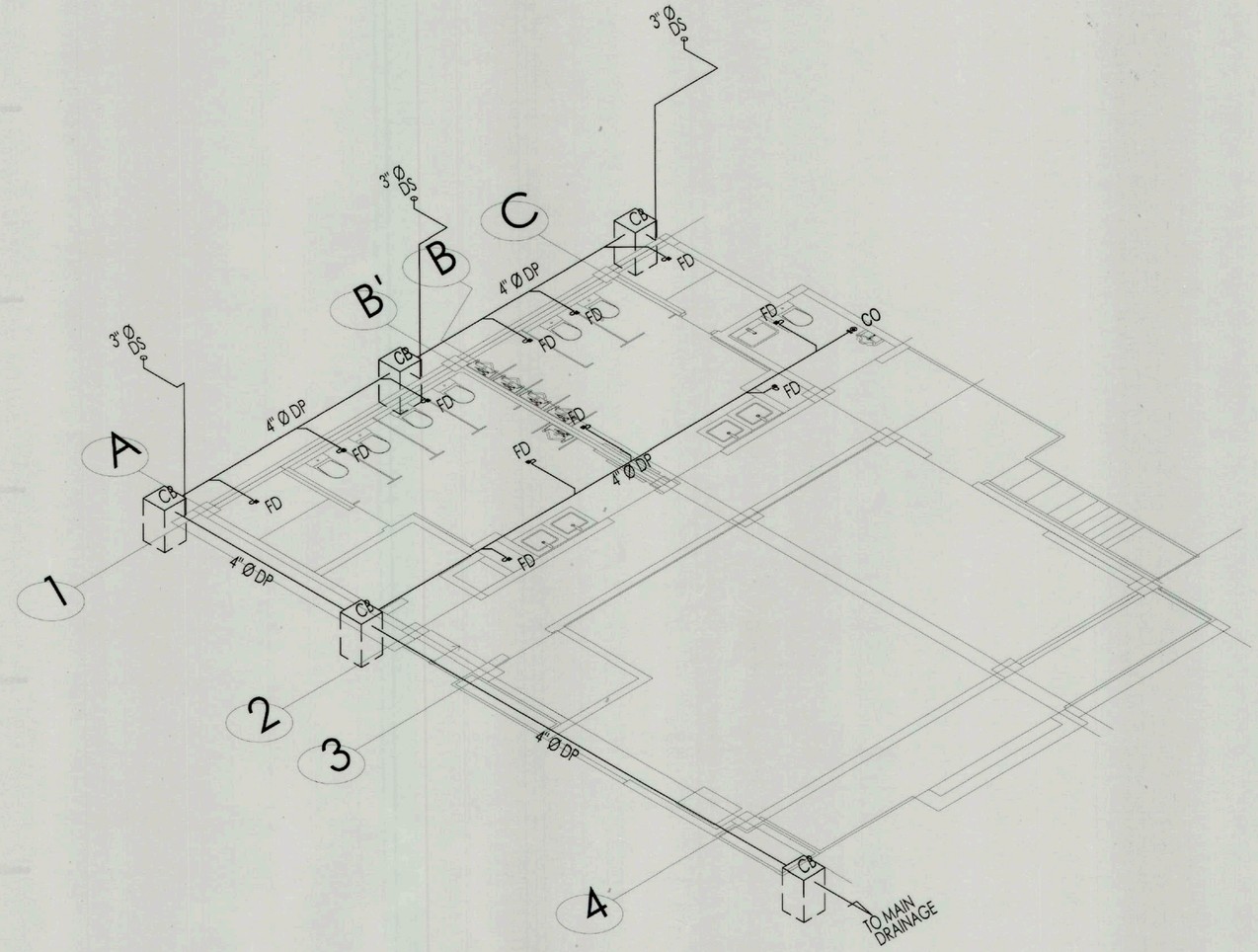

2 P 07 DRAINAGE ISOMETRIC VIEW
SCALE 1:50

MANOLO FORTICH

TIEZA TOURISM INFRASTRUCTURE AND ENTERPRISE ZONE AUTHORITY 6th & 7th FLR. TOWER 1 DOUBLE DRAGON PLAZA DOUBLE DRAGON MERIDIAN PARK, MACAPAGAL AVENUE CORNER EDSA EXTENSION BAY AREA PASAY CITY 1308	PROJECT TITLE/LOCATION: **TOURIST SERVICE CENTER AND REST AREA** BRGY. PEÑAPLATA, IGACOS, DAVAO DEL NORTE AND MANOLO FORTICH, BUKIDNON	PROJECT EVALUATION AND PLANNING DEPARTMENT PREPARED BY: JUNELL IAN T. MEDINO DRAWN BY: JITM DATE: SEPTEMBER 5, 2022	CHECKED BY: RADY E. ADAME MANAGER PROJECT PLANNING & DESIGN DIVISION	REVIEWED BY: JEOFFREY L. MACALALAD OIC - MANAGER PROJECT EVALUATION & PLANNING DEPARTMENT	RECOMMENDING APPROVAL: GREGORY A. OLLER ASSISTANT CHIEF OPERATING OFFICER, ARCHITECTURAL AND ENGINEERING SERVICES SECTOR	APPROVED BY: MARK T. LAPID CHIEF OPERATING OFFICER	SHEET CONTENTS: DRAINAGE LAY-OUT DRAINAGE ISOMETRIC VIEW REVISIONS:	R.A. 9266 THIS DRAWING AS INSTRUMENT OF SERVICE IS A PROPERTY OF TIEZA. IT SHALL BE UNLAWFUL TO DUPLICATE OR TO MAKE COPIES OF THIS DOCUMENT WITHOUT THE CONCENT OF TIEZA.	SHEET NO. P 07 7 7

PEPD.QF.02a

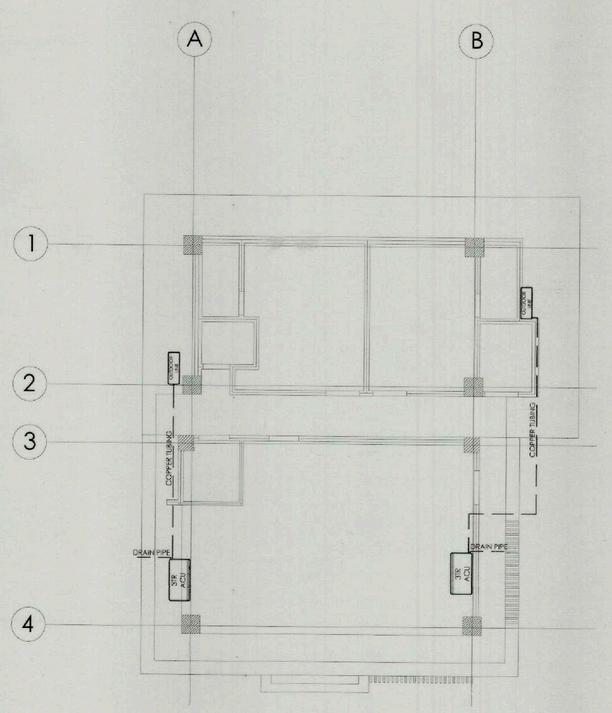

A / A-1 AIRCONDITIONING SYSTEM LAYOUT

SCALE 1: 100M

LEGEND:

- 3TR CEILING MOUNTED, SPLIT TYPE AIRCON 1220mm x 625mm x 232mm
- OUTDOOR UNIT 936mm x 336mm x 722mm
- — — DRAIN PIPE
- — — COPPER TUBING

GENERAL NOTES:

1. AIR CONDITIONED SHALL BE INVERTER TYPE AND AREAS SHALL MAINTAINED AT 22°C

2. THE CONTRACTOR SHALL BE RESPONSIBLE FOR ALL BALANCING, TESTING AND COMMISSIONING OF THE WHOLE AIR CONDITIONING AND VENTILATION SYSTEM

3. WORKMANSHIP: THE WORK THROUGHOUT SHALL BE EXECUTED IN THE BEST AND THOROUGH MANNER KNOWN TO TRACE AND TO THE SATISFACTION OF THE OF THE ARCHITECT AND THE ENGINEER IN CHARGE.

4. THE CONTRACTOR SHALL SUBMIT SHOP DRAWINGS SHOWING ALL THE DETAILS FOR APPROVAL BY THE ENGINEER OR OWNERS REPRESENTATIVES PRIOR TO THE CONSTRUCTION AND/OR
INSTALLATION SCHEDULE;

5. THE CONTRACTOR SHALL INSPECT AND ASCERTAIN THE QUANTITY AND QUALITY OF MATERIALS PRIOR TO THE DELIVERY AT SITE, ANY DEFECTS, DAMAGES AND/OR DEFICIENCIES ON THE MATERIALS PRIOR TO THE ACCEPTANCE SHALL BE BORNE, REPLACED AND/OR COMPLETE BY THE CONTRACTOR;

6. CONDENSATE DRAIN RECEPTACLE SHALL BE PROVIDED BY THE PLUMBING CONTRACTOR WITHIN A MAXIMUM DISTANCE OF 10 FEET FROM ANY AIR CONDITIONING UNITS, DRAINS SHALL HAVE A 2
SLOPE;

7. THIS DRAWING IS NOT INTENDED TO SHOW EVERY DETAIL OF INSTALLATION, FITTINGS AND ACCESSORIES REQUIRED TO COMPLETE THE JOB.

TIEZA TOURISM INFRASTRUCTURE AND ENTERPRISE ZONE AUTHORITY 6th & 7th FLR. TOWER 1 DOUBLE DRAGON PLAZA DOUBLE DRAGON MERIDIAN PARK, MACAPAGAL AVENUE CORNER EDSA EXTENSION BAY AREA PASAY CITY 1308	PROJECT TITLE/ LOCATION: TOURIST SERVICE CENTER AND REST AREA BRGY. PEÑAPLATA, IGACOS, DAVAO DEL NORTE AND BRGY. TANKULAN, MANOLO FORTICH, BUKIDNON	PROJECT EVALUATION AND PLANNING DEPARTMENT PREPARED BY: JOHN ARNIE I. PASTRANA DRAWN BY: JAIP DATE: SEPTEMBER 5, 2022	CHECKED BY: RADY E. ADAME MANAGER PROJECT PLANNING & DESIGN DIVISION	REVIEWED BY: JEOFFREY L. MACALALAD OIC - MANAGER PROJECT EVALUATION & PLANNING DEPARTMENT	RECOMMENDING APPROVAL: GREGORY A. OLLER ASSISTANT CHIEF OPERATING OFFICER ARCHITECTURAL & ENGINEERING SERVICES SECTOR	APPROVED BY: MARK T. LAPID CHIEF OPERATING OFFICER	SHEET CONTENTS: AIRCONDITIONING SYSTEM LAY-OUT LEGEND GENERAL NOTES REVISIONS:	R.A. 9266 THIS DRAWING AS INSTRUMENT OF SERVICE IS A PROPERTY OF TIEZA. IT SHALL BE UNLAWFUL TO DUPLICATE OR TO MAKE COPIES OF THIS DOCUMENT WITHOUT THE CONCENT OF TIEZA.	SHEET NO. M 01 1 1

PEPD.QF.02a

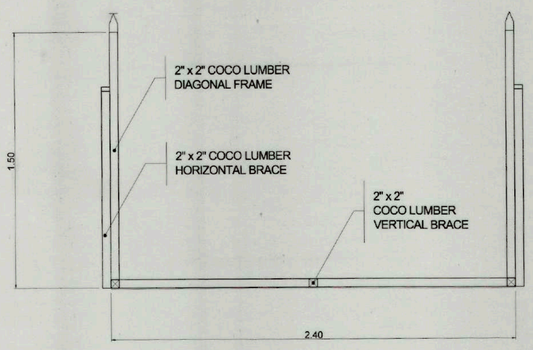

PLAN

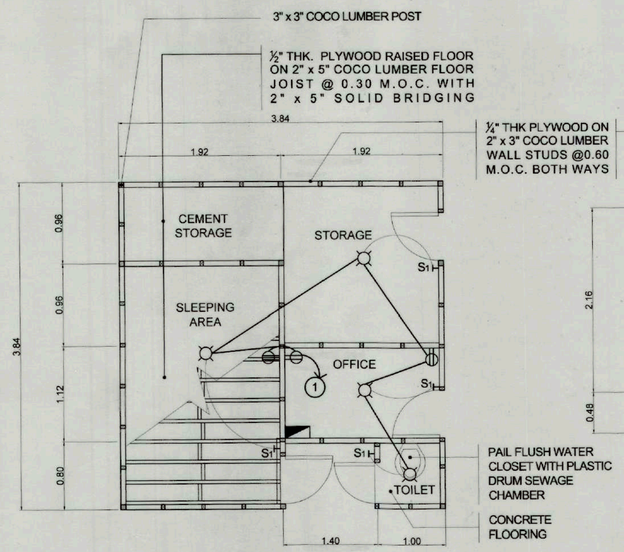

FLOOR PLAN

LEGEND:
- NO.12 TW WIRE FOR MAIN LINE
- NO. 14 TW WIRE FOR SWITCH
- SAFETY SWITCH 30A
- 25W LED BULB
- S1 ONE GANG SWITCH
- CONVENIENCE OUTLET

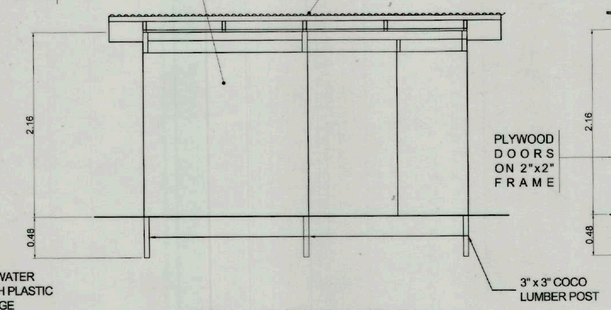

FRONT ELEVATION

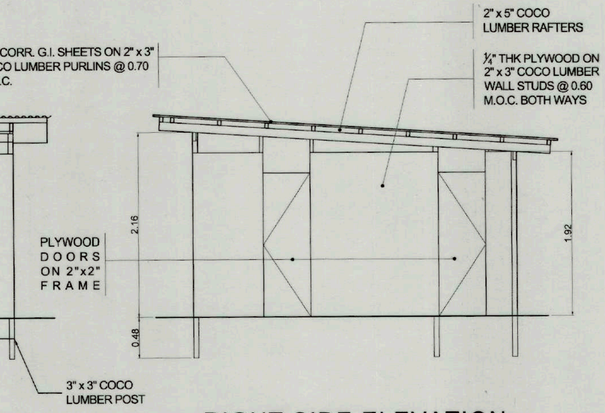

RIGHT SIDE ELEVATION

2 TF 01 TEMPORARY BARRACKS
SCALE 1:50

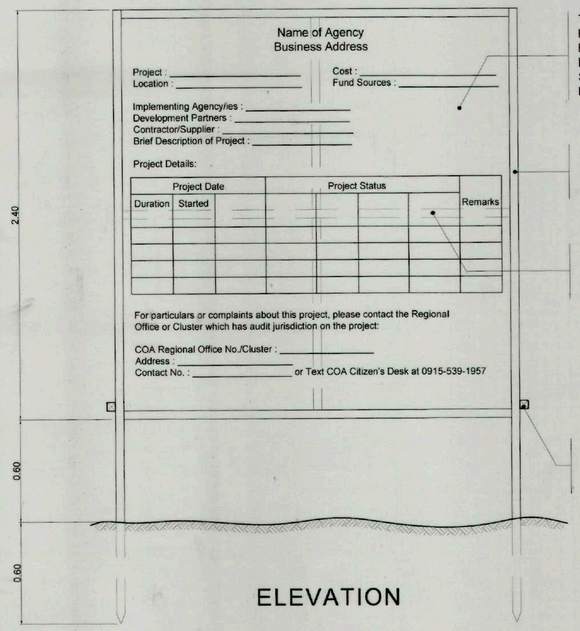

ELEVATION

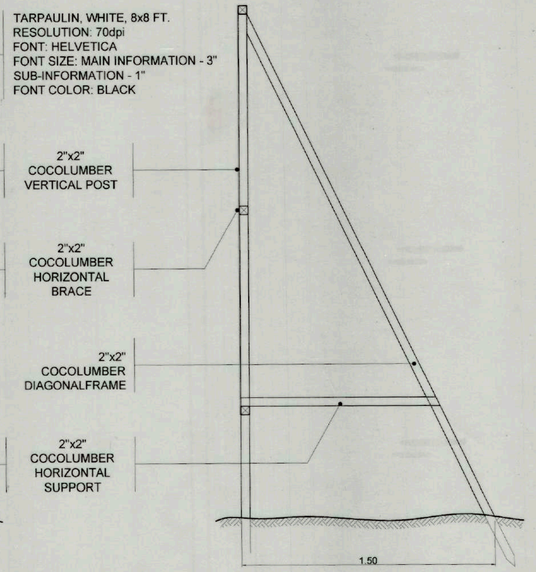

SECTION

1 TF 01 PROJECT SIGNAGE
SCALE 1:20

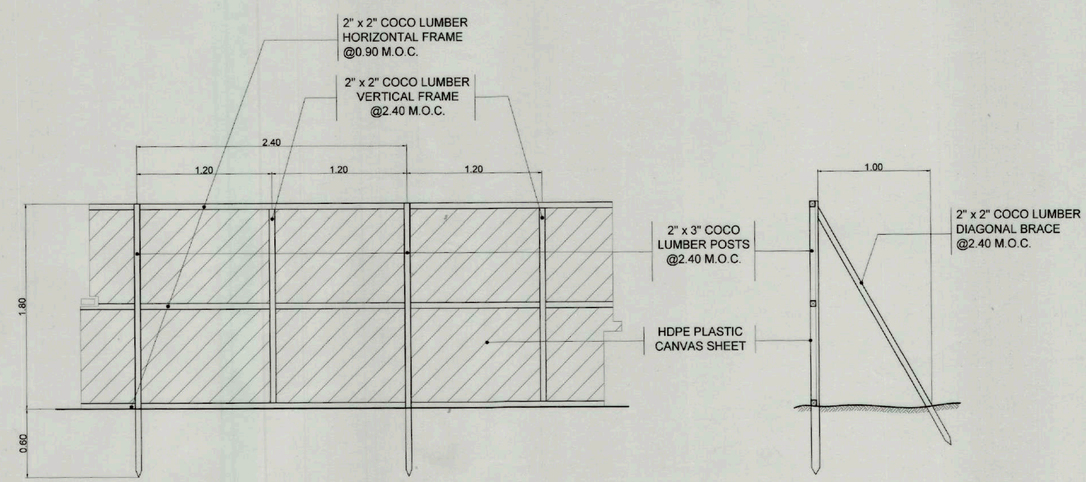

3 TF 01 TEMPORARY FENCE
SCALE 1:30

TIEZA
TOURISM INFRASTRUCTURE AND ENTERPRISE ZONE AUTHORITY
6th & 7th FLR. TOWER 1 DOUBLE DRAGON PLAZA
DOUBLE DRAGON MERIDIAN PARK, MACAPAGAL AVENUE
CORNER EDSA EXTENSION BAY AREA PASAY CITY 1308

PROJECT TITLE/ LOCATION:
TOURIST SERVICE CENTER AND REST AREA
BRGY. PEÑAPLATA, IGACOS, DAVAO DEL NORTE AND MANOLO FORTICH, BUKIDNON

PROJECT EVALUATION AND PLANNING DEPARTMENT

PREPARED BY:	CHECKED BY:	REVIEWED BY:	RECOMMENDING APPROVAL:	APPROVED BY:
JORGE JR. B. POLINTAN	RADY E. ADAME	JEOFFREY L. MACALALAD	GREGORY A. OLLER	MARK T. LAPID
DRAWN BY: JBP	MANAGER, PROJECT PLANNING & DESIGN DIVISION	OIC - MANAGER, PROJECT EVALUATION & PLANNING DEPARTMENT	ASSISTANT CHIEF OPERATING OFFICER, ARCHITECTURAL & ENGINEERING SERVICES SECTOR	CHIEF OPERATING OFFICER
DATE: SEPTEMBER 19, 2022				

SHEET CONTENTS:
PROJECT SIGNAGE
TEMPORARY BARRACKS
TEMPORARY FENCE

REVISIONS:

R.A. 9266

THIS DRAWING AS INSTRUMENT OF SERVICE IS A PROPERTY OF TIEZA. IT SHALL BE UNLAWFUL TO DUPLICATE OR TO MAKE COPIES OF THIS DOCUMENT WITHOUT THE CONCENT OF TIEZA.

SHEET NO. TF 01 1 1

PEPD.QF.02a